YAMAHA

PARTS CATALOGUE

TZ250(5KE2)

2000.11発行

YAMAHA GENUINE Parts & Accessories

115KE-010E1
5KE-28198-11-E1

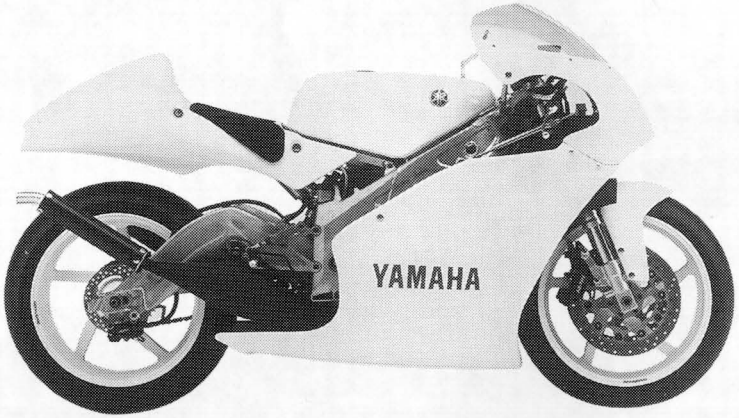

A3

ま　え　が　き

このパーツカタログは、ヤマハＴＺ２５０（５ＫＥ２）に使用されている補修用販売部品が記載されています。

部品を御注文の際は、本パーツカタログを御参照の上、部品番号、部品名、数量を正確に御指示下さい。

1．部品の新設、廃止または変更が生じた場合は、部品ニュースにてお知らせ致しますので、お手許のパーツカタログを御訂正下さい。

2．アセンブリでの販売部品は、その構成する部品名の頭に（・）印をつけて一文字下げた状態にて表わしてあります。

3．アセンブリでの販売部品使用個数は、アセンブリ単体に含まれる使用個数を表示してあります。

（例）

部品番号	部品名	使用個数
４Ｊ２－８３３１０－００	フロントフラッシャランプアセンブリ	２
３Ｌ５－８３３１２－００	・レンズ，フラッシャ	１
１８５－８３３１１－１０	・バルブ（６Ｖ－８Ｗ）	１

4．本文中に記載されています省略記号は次の様になっています。

ＳＴＤ	スタンダード
ＵＲ	選択
ＵＮ	必要数
ＡＰ	別売品
Ｏ／Ｓ	オーバーサイズ
ＬＭ	現地調達部品

5．フューエルタンク　グラフィック及びエンブレムが複数にて使用されている場合は、摘要欄に該当仕様色名が記載されています。

（例）

部品番号	部品名	使用個数	摘要
３ＦＹ－２４１１０－００－０１	フュエルタンクコンプリート	１	ＵＲソフィアイエロー
３ＦＹ－２４１１０－００－０２	フュエルタンクコンプリート	１	ＵＲホワイト
３ＦＹ－２４２４０－００	・グラフィックセット	１	ＵＲソフィアイエローヨウ
３ＦＹ－２４２４０－１０	・グラフィックセット	１	ＵＲホワイトヨウ
３ＦＹ－２４１６１－００	・エンブレム　１	２	

6．本モデルには、モデルラベルが貼り付けられております。尚、モデルラベルには登録型式、製品連番及びカラータイプが記載されています。

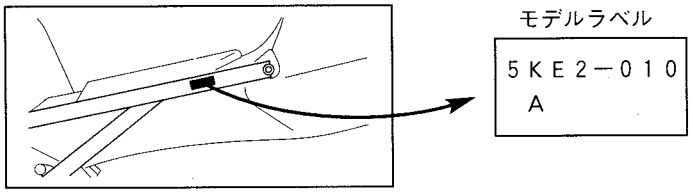

7．本モデルの打刻仕様、塗色部品の使用は、次の様になっています。

① エンジン型式	Ｇ２０１Ｅ	②フレーム打刻型式	ＣＧ０９Ｃ

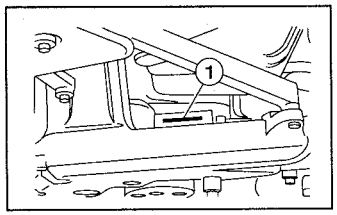

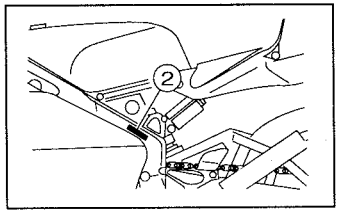

カラータイプ	色番号	色名	省略記号
Ａ	００３６	ホワイト	Ｗ

8．本モデルのサービス資料の部品番号は、下記の通りです。

資料名	部品番号
オーナーズサービスマニアル	５ＫＥ－２８１９９－Ｊ１

CONTENTS

ENGINE

CYLINDER HEAD B2
CRANKSHAFT. PISTON B4
COUNTER SHAFT B5
WATER PUMP B6
RADIATOR. HOSE B7
OIL PUMP B8
INTAKE B9
CARBURETOR B10
EXHAUST B13
CRANKCASE B14
CLUTCH B15
TRANSMISSION C3
SHIFT CAM. FORK C5
SHIFT SHAFT C6

CHASSIS

FRAME C7
REAR ARM C9
REAR SUSPENSION C10
STEERING C11
FRONT FORK C12
FUEL TANK C14
SEAT D2
FRONT WHEEL D3
FRONT BRAKE CALIPER D4
REAR WHEEL D5
REAR BRAKE CALIPER D7
STEERING HANDLE. CABLE D8
FRONT MASTER CYLINDER D9
STAND. FOOTREST D11
COWLING 1 ..... D13
GENERATOR D15
METER E2
HANDLE SWITCH. LEVER E3
ELECTRICAL 1 ..... E4

INDEX

NUMERICAL INDEX M1

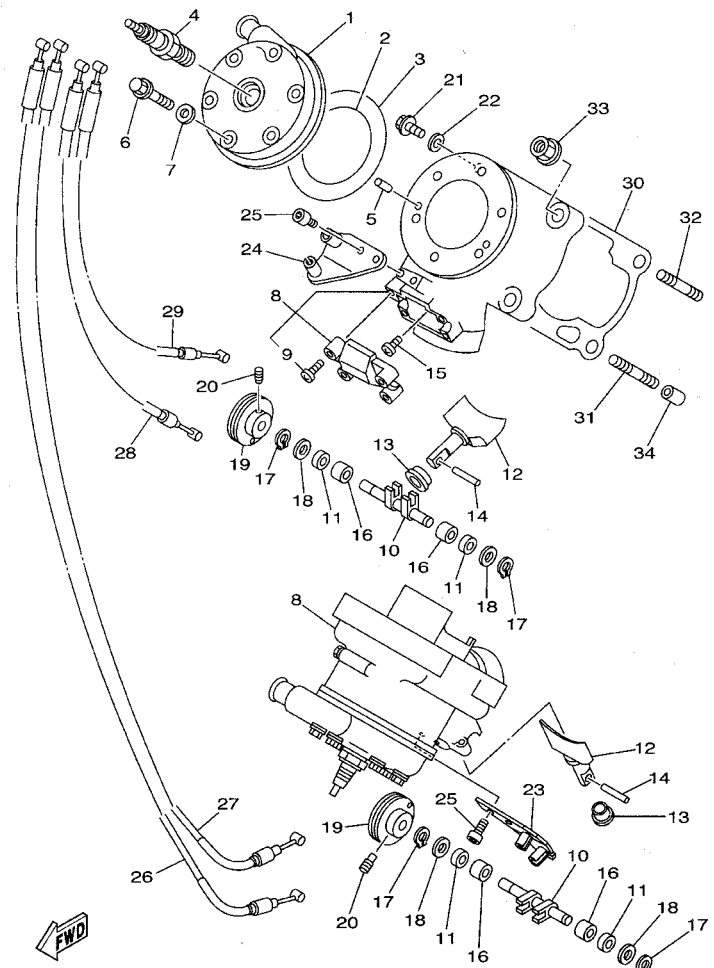

FIG. 1 CYLINDER HEAD

REF. NO.	PART NO.	DESCRIPTION	USA	EUR	OCE	JPN		REMARKS
1	5KE-11111-00	HEAD, CYLINDER 1	2	2	2	2		
2	93210-63442	O-RING	2	2	2	2		
3	93210-88696	O-RING	2	2	2	2		
4	94702-00374	PLUG, SPARK (R6179A-105P)	2	2	2			NGK
	94709-00374	PLUG, SPARK (R6179A-105P)				2		NGK
5	93604-08071	PIN, DOWEL	4	4	4	4		
6	90105-063A0	BOLT, WASHER BASED	12	12	12	12		
7	90430-06166	GASKET	12	12	12	12		
8	5KE-11310-00	CYLINDER	2	2	2	2		
9	98907-05020	.SCREW, BIND	4	4	4	4		
10	3LC-1131V-00	SHAFT 1	2	2	2	2		
11	93104-08040	OIL SEAL	4	4	4	4		
12	5KE-1131A-00	VALVE 1	2	2	2	2		
13	1RK-1131E-00	HOLDER 1	2	2	2	2		
14	93604-26256	PIN, DOWEL	2	2	2	2		
15	90109-05001	BOLT	2	2	2	2		
16	90380-08192	BUSH, SOLID	4	4	4	4		
17	93440-08130	CIRCLIP	4	4	4	4		
18	90201-08403	WASHER, PLATE	4	4	4	4		
19	4DP-1132E-00	PULLEY 1	2	2	2	2		
20	90149-05149	SCREW	2	2	2	2		
21	95827-06010	BOLT, FLANGE	2	2	2	2		
22	90430-06166	GASKET	2	2	2	2		
23	3YL-11932-10	SETTER, WIRE	1	1	1	1		
24	3YL-11932-00	SETTER, WIRE	1	1	1	1		
25	91317-05010	BOLT	4	4	4	4		
26	4TW-1133E-00	CABLE, PULLEY 1	1	1	1	1		CLOSE

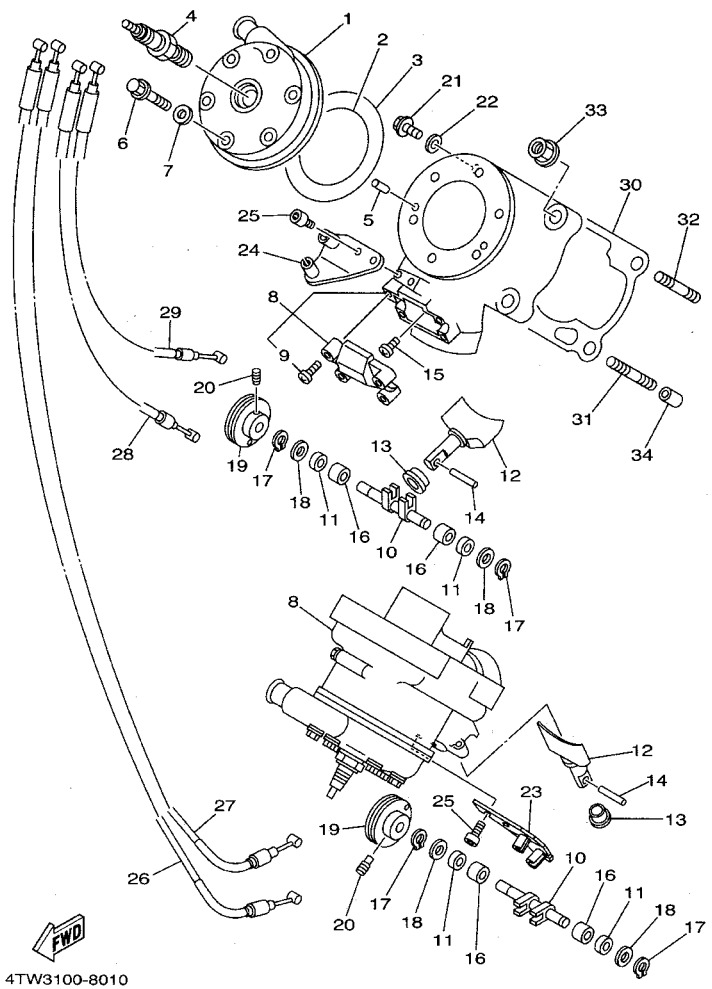

FIG. 1 CYLINDER HEAD

REF. NO.	PART NO.	DESCRIPTION	USA	EUR	OCE	JPN		REMARKS
27	4TW-1133F-00	CABLE, PULLEY 2	1	1	1	1		OPEN
28	4TW-1133G-00	CABLE, PULLEY 3	1	1	1	1		CLOSE
29	4TW-1133H-01	CABLE, PULLEY 4	1	1	1	1		OPEN
30	5KE-11351-60	GASKET, CYLINDER	2	2	2	2		STD
	5KE-11351-20	GASKET, CYLINDER	2	2	2	2		AP
	5KE-11351-30	GASKET, CYLINDER	2	2	2	2		AP
	5KE-11351-40	GASKET, CYLINDER	2	2	2	2		AP
	5KE-11351-50	GASKET, CYLINDER	2	2	2	2		AP
31	90116-08409	BOLT, STUD	4	4	4	4		
32	90116-08564	BOLT, STUD	4	4	4	4		
33	95707-08500	NUT, FLANGE	8	8	8	8		
34	99510-10114	PIN, DOWEL	4	4	4	4		

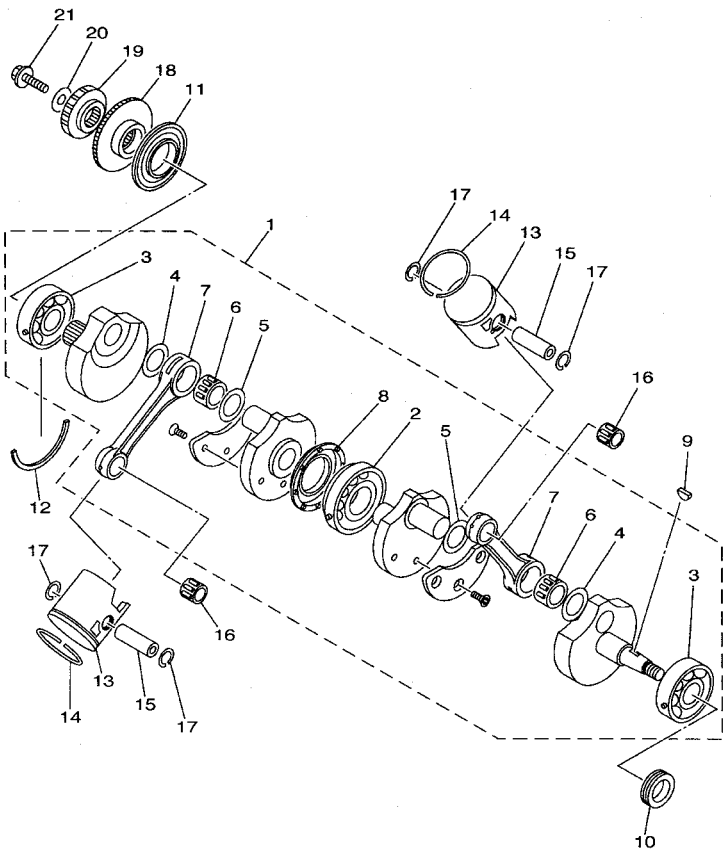

5KE2100-1020

FIG. 2 CRANKSHAFT. PISTON

REF. NO.	PART NO.	DESCRIPTION	USA	EUR	OCE	JPN		REMARKS
1	5KE-11400-10	CRANKSHAFT ASSY	1	1	1	1		
2	93306-30635	.BEARING	1	1	1	1		
3	93306-30572	.BEARING	2	2	2	2		
4	90209-24327	.WASHER	2	2	2	2		
5	90209-24316	.WASHER	2	2	2	2		
6	93310-52403	.BEARING	2	2	2	2		
7	5KE-11651-01	.ROD, CONNECTING	2	2	2	2		
8	93101-44160	.OIL SEAL	1	1	1	1		
9	90280-04001	KEY, WOODRUFF	1	1	1	1		
10	93102-25438	OIL SEAL	1	1	1	1		
11	93102-35030	OIL SEAL	1	1	1	1		
12	278-17424-01	CIRCLIP 1	1	1	1	1		
13	5KE-11631-01-A0	PISTON (STD)	2	2	2	2		
	5KE-11631-01-B0	PISTON (STD)	2	2	2	2		
	5KE-11631-01-C0	PISTON (STD)	2	2	2	2		
14	4JT-11611-10	RING, PISTON	2	2	2	2		
15	4XM-11633-01	PIN, PISTON	1	1	1	1		
16	93310-31510	BEARING	2	2	2	2		
17	93450-16068	CIRCLIP	4	4	4	4		
18	5KE-11536-00	GEAR, DRIVE	1	1	1	1		
19	5KE-16111-00	GEAR, PRIMARY DRIVE	1	1	1	1		
20	90201-10144	WASHER, PLATE	1	1	1	1		
21	90105-10445	BOLT, WASHER BASED	1	1	1	1		

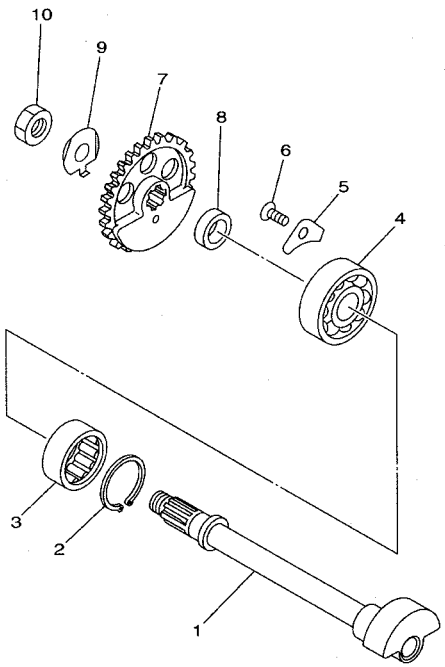

5KE1100-0030

FIG. 3 COUNTER SHAFT

REF. NO.	PART NO.	DESCRIPTION	USA	EUR	OCE	JPN		REMARKS
1	5KE-11455-00	SHAFT 1	1	1	1	1		
2	93420-30049	CIRCLIP	1	1	1	1		
3	93311-32261	BEARING	1	1	1	1		
4	93306-30316	BEARING	1	1	1	1		
5	4JT-15381-01	PLATE, BEARING COVER	1	1	1	1		
6	90151-06001	SCREW, COUNTERSUNK	1	1	1	1		
7	5KE-11531-00	GEAR, BALANCE WT	1	1	1	1		
8	90387-176R1	COLLAR	1	1	1	1		
9	90215-14204	WASHER, LOCK	1	1	1	1		
10	90170-14171	NUT	1	1	1	1		

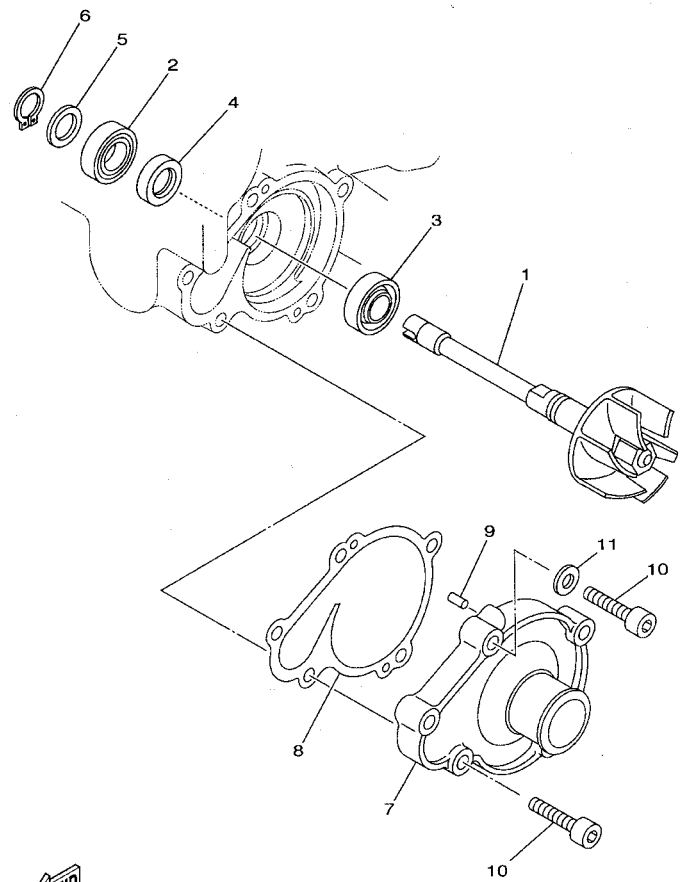

5KE2100-1040

FIG. 4 WATER PUMP

REF. NO.	PART NO.	DESCRIPTION	USA	EUR	OCE	JPN		REMARKS
1	5KE-12450-00	IMPELLER SHAFT ASSY	1	1	1	1		
2	93306-90109	BEARING	1	1	1	1		
3	93109-11073	OIL SEAL	1	1	1	1		
4	93101-12126	OIL SEAL	1	1	1	1		
5	90201-12166	WASHER, PLATE	1	1	1	1		
6	99009-12400	CIRCLIP	1	1	1	1		
7	5KE-12422-01	COVER, HOUSING	1	1	1	1		
8	5KE-12428-00	GASKET, HOUSING COVER 2	1	1	1	1		
9	93604-10011	PIN, DOWEL	2	2	2	2		
10	91317-06025	BOLT	5	5	5	5		
11	90430-06166	GASKET	1	1	1	1		

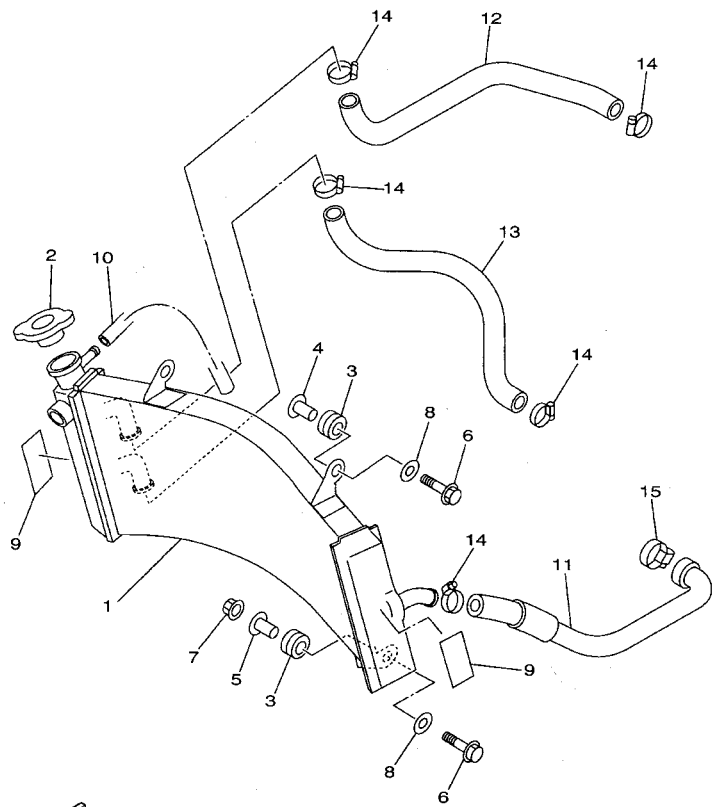

5KE1100-0050

FIG. 5 RADIATOR. HOSE

REF. NO.	PART NO.	DESCRIPTION	USA	EUR	OCE	JPN		REMARKS
1	4TW-12461-01	RADIATOR ASSY	1	1	1	1		
2	22W-12462-00	CAP, RADIATOR	1	1	1	1		
3	90480-15363	GROMMET	3	3	3	3		
4	90387-066N1	COLLAR	2	2	2	2		
5	90387-063E6	COLLAR	1	1	1	1		
6	95027-06030	BOLT, FLANGE	3	3	3	3		
7	95607-06200	NUT, SELF U-FLANGE	1	1	1	1		
8	90201-06571	WASHER, PLATE	3	3	3	3		
9	3YL-12232-00	DAMPER	2	2	2	2		
10	90445-09251	HOSE (L350)	1	1	1	1		
11	5KE-12482-00	PIPE 2	1	1	1	1		
12	5KE-12483-00	PIPE 3	1	1	1	1		
13	4TW-12484-10	PIPE 4	1	1	1	1		
14	90460-20190	CLAMP, HOSE	5	5	5	5		
15	90450-40009	HOSE CLAMP ASSY	1	1	1	1		

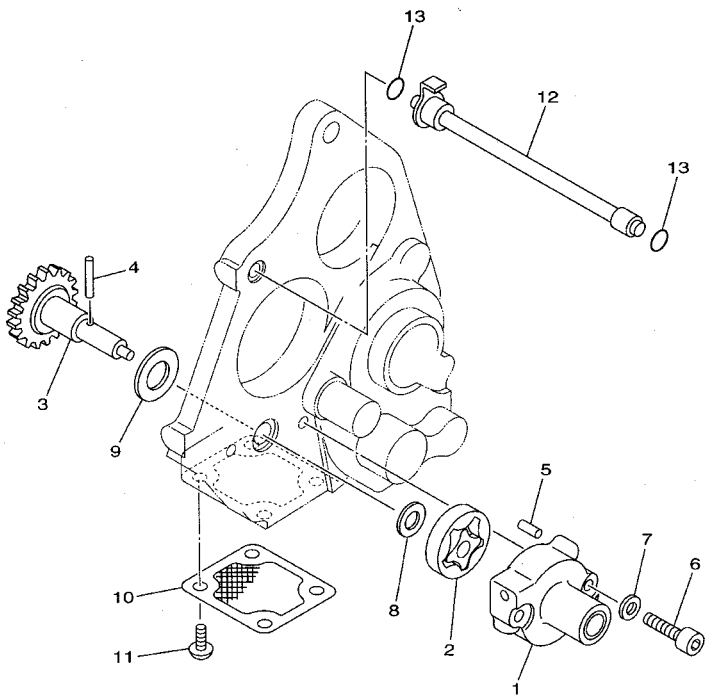

5KE1100-0060

FIG. 6 OIL PUMP

REF. NO.	PART NO.	DESCRIPTION	USA	EUR	OCE	JPN		REMARKS
1	5KE-13316-00	COVER, PUMP	1	1	1	1		
2	5H0-13310-00	ROTOR ASSY 1	1	1	1	1		
3	4DP-Y1332-00	GEAR, PUMP	1	1	1	1		
4	93603-12030	PIN, DOWEL	1	1	1	1		
5	93604-10011	PIN, DOWEL	2	2	2	2		
6	91317-05025	BOLT	3	3	3	3		
7	92907-05600	WASHER, PLATE	3	3	3	3		
8	90201-08512	WASHER, PLATE	1	1	1	1		
9	90201-127E1	WASHER, PLATE	1	1	1	1		
10	5KE-13411-00	STRAINER, OIL	1	1	1	1		
11	98507-06010	SCREW, PAN HEAD	4	4	4	4		
12	5KE-13161-00	PIPE, DELIVERY 1	1	1	1	1		
13	93210-06001	O-RING	2	2	2	2		

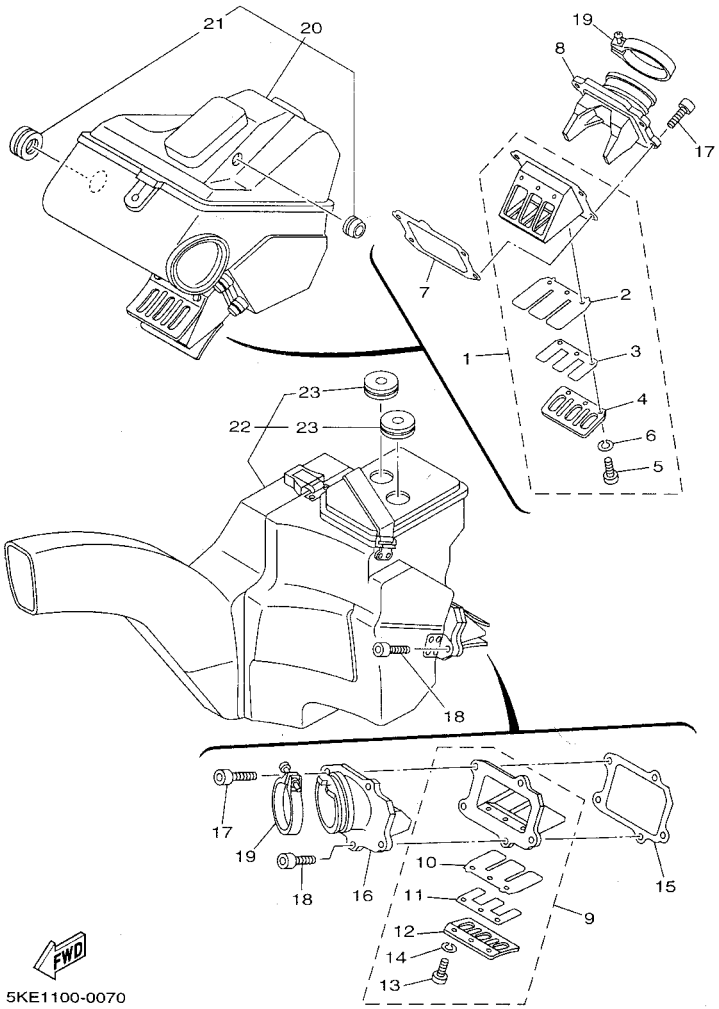

FIG. 7 INTAKE

REF. NO.	PART NO.	DESCRIPTION	USA	EUR	OCE	JPN		REMARKS
1	5KE-13610-00	REED VALVE ASSY	1	1	1	1		
2	3XV-13613-01	.REED, VALVE	2	2	2	2		
3	2KM-13614-00	.REED, VALVE 2	2	2	2	2		
4	3YL-13617-00	.STOPPER, REED VALVE 2	2	2	2	2		
5	98507-03006	.SCREW, PAN HEAD	6	6	6	6		
6	92907-03100	.WASHER	6	6	6	6		
7	5KE-13621-00	GASKET, VALVE SEAT	1	1	1	1		
8	5KE-13555-00	MANIFOLD, INTAKE	1	1	1	1		
9	5KE-13620-00	REED VALVE ASSY	1	1	1	1		
10	3XV-13613-01	.REED, VALVE	2	2	2	2		
11	2KM-13614-00	.REED, VALVE 2	2	2	2	2		
12	3YL-13617-00	.STOPPER, REED VALVE 2	2	2	2	2		
13	98507-03006	.SCREW, PAN HEAD	6	6	6	6		
14	92907-03100	.WASHER	6	6	6	6		
15	5KE-13622-00	GASKET, VALVE SEAT	1	1	1	1		
16	5KE-13565-00	JOINT, CARBURETOR	1	1	1	1		
17	91317-06025	BOLT	6	6	6	6		
18	91314-06020	BOLT	3	3	3	3		
19	90460-52210	CLAMP, HOSE	2	2	2	2		
20	5KE-2160A-00	BOX COMP.	1	1	1	1		L.H.
21	90480-25482	.GROMMET	1	1	1	1		
22	5KE-21240-00	BOX COMP.	1	1	1	1		R.H.
23	90480-25482	.GROMMET	2	2	2	2		

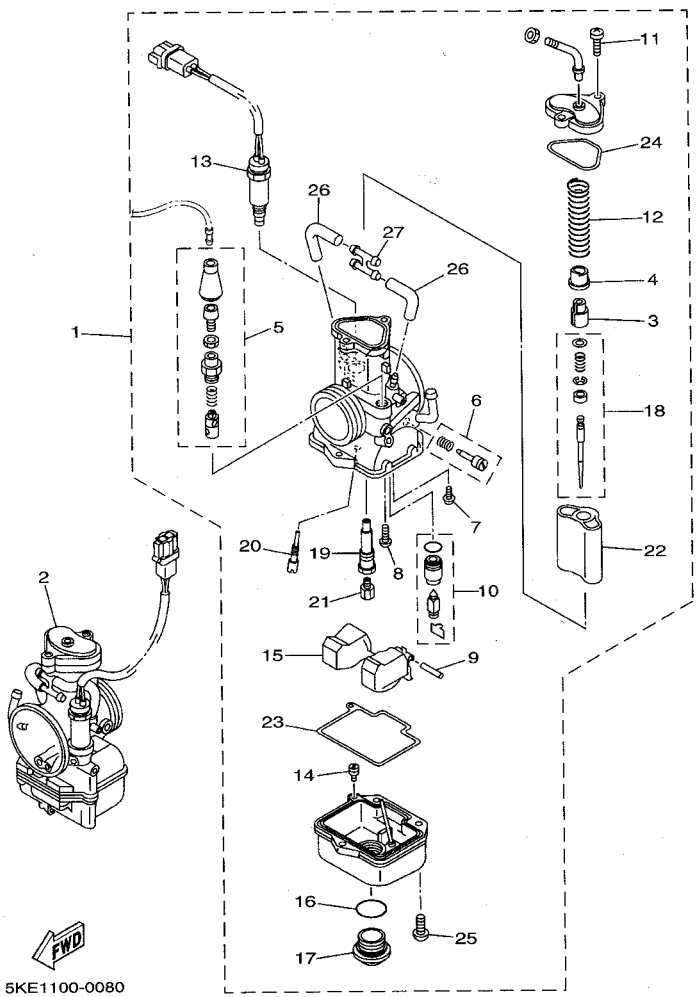

FIG. 8 CARBURETOR

REF. NO.	PART NO.	DESCRIPTION	USA	EUR	OCE	JPN		REMARKS
1	5KE-14101-10	CARBURETOR ASSY 1	1	1	1	1		
2	5KE-14102-10	CARBURETOR ASSY 2	1	1	1	1		
3	5KE-14261-00	.HOLDER	1	1	1	1		
4	4PE-14194-00	.RING	1	1	1	1		
5	4TW-1410A-00	.STARTER SET	1	1	1	1		
6	3JD-14104-00	.AIR SCREW SET	1	1	1	1		
7	1FN-14565-00	.SCREW	1	1	1	1		
8	98507-04008	.SCREW, PAN HEAD	1	1	1	1		
9	353-14186-00	.PIN, FLOAT	1	1	1	1		
10	4TW-14107-15	.NEEDLE VALVE SET	1	1	1	1		
11	98507-04014	.SCREW, PAN HEAD	2	2	2	2		
12	4TW-14131-00	.SPRING, THROTTLE VALVE	1	1	1	1		
13	5KE-1410H-00	.FUEL CUT SOLENOID VALVE	1	1	1	1		
14	830-14231-11	.JET, MAIN (#55)	1	1	1	1		STD
	830-14231-10	.JET, MAIN (#50)	1	1	1	1		AP
15	5ET-14185-00	.FLOAT	1	1	1	1		
16	2K6-14147-00	.O-RING	1	1	1	1		
17	5ET-14115-00	.PLUG, SCREW	1	1	1	1		
18	5KE-1490J-10	.NEEDLE SET	1	1	1	1		
19	5KE-14141-S4	.NOZZLE, MAIN	1	1	1	1		STD
	5KE-14141-R7	.NOZZLE, MAIN	1	1	1	1		AP
	5KE-14141-R8	.NOZZLE, MAIN	1	1	1	1		AP
	5KE-14141-R9	.NOZZLE, MAIN	1	1	1	1		AP
	5KE-14141-S0	.NOZZLE, MAIN	1	1	1	1		AP
	5KE-14141-S1	.NOZZLE, MAIN	1	1	1	1		AP
	5KE-14141-S2	.NOZZLE, MAIN	1	1	1	1		AP
	5KE-14141-S3	.NOZZLE, MAIN	1	1	1	1		AP

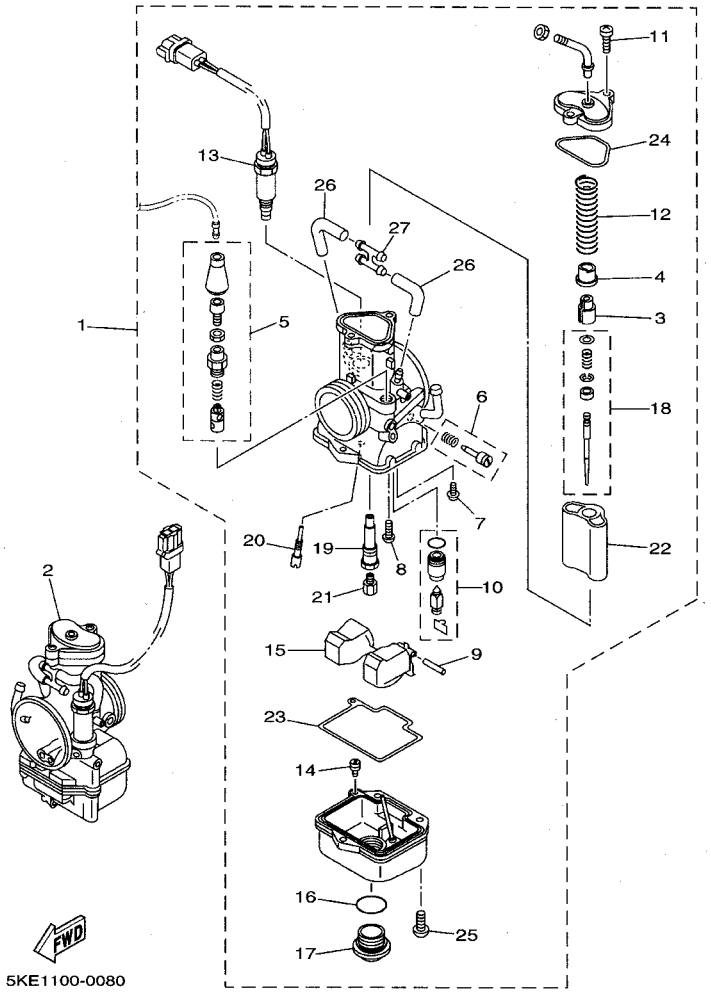

FIG. 8 CARBURETOR

REF. NO.	PART NO.	DESCRIPTION	USA	EUR	OCE	JPN		REMARKS
20	4KM-14142-40	.JET, PILOT (#40)	1	1	1	1		STD
	4KM-14142-25	.JET, PILOT (#25)	1	1	1	1		AP
	4KM-14142-30	.JET, PILOT (#30)	1	1	1	1		AP
	4KM-14142-35	.JET, PILOT (#35)	1	1	1	1		AP
21	137-1414K-12	.JET, MAIN (#560)	1	1	1	1		STD
	137-1414K-00	.JET, MAIN (#500)	1	1	1	1		AP
	137-1414K-08	.JET, MAIN (#540)	1	1	1	1		AP
	137-14143-70	.JET, MAIN (#350)	1	1	1	1		AP
	137-14143-72	.JET, MAIN (#360)	1	1	1	1		AP
	137-14143-74	.JET, MAIN (#370)	1	1	1	1		AP
	137-14143-76	.JET, MAIN (#380)	1	1	1	1		AP
	137-14143-78	.JET, MAIN (#390)	1	1	1	1		AP
	137-14143-80	.JET, MAIN (#400)	1	1	1	1		AP
	137-14143-82	.JET, MAIN (#410)	1	1	1	1		AP
	137-14143-84	.JET, MAIN (#420)	1	1	1	1		AP
	137-14143-86	.JET, MAIN (#430)	1	1	1	1		AP
	137-14143-88	.JET, MAIN (#440)	1	1	1	1		AP
	137-14143-90	.JET, MAIN (#450)	1	1	1	1		AP
	137-14143-92	.JET, MAIN (#460)	1	1	1	1		AP
	137-14143-94	.JET, MAIN (#470)	1	1	1	1		AP
	137-14143-96	.JET, MAIN (#480)	1	1	1	1		AP
	137-14143-98	.JET, MAIN (#490)	1	1	1	1		AP
22	5KE-14112-50	.VALVE, THROTTLE 1	1	1	1	1		
23	4TW-1416A-00	.O-RING	1	1	1	1		
24	5ET-14147-00	.O-RING	1	1	1	1		
25	98507-05014	.SCREW, PAN HEAD	3	3	3	3		
26	4TW-14197-00	.PIPE	2	2	2	2		

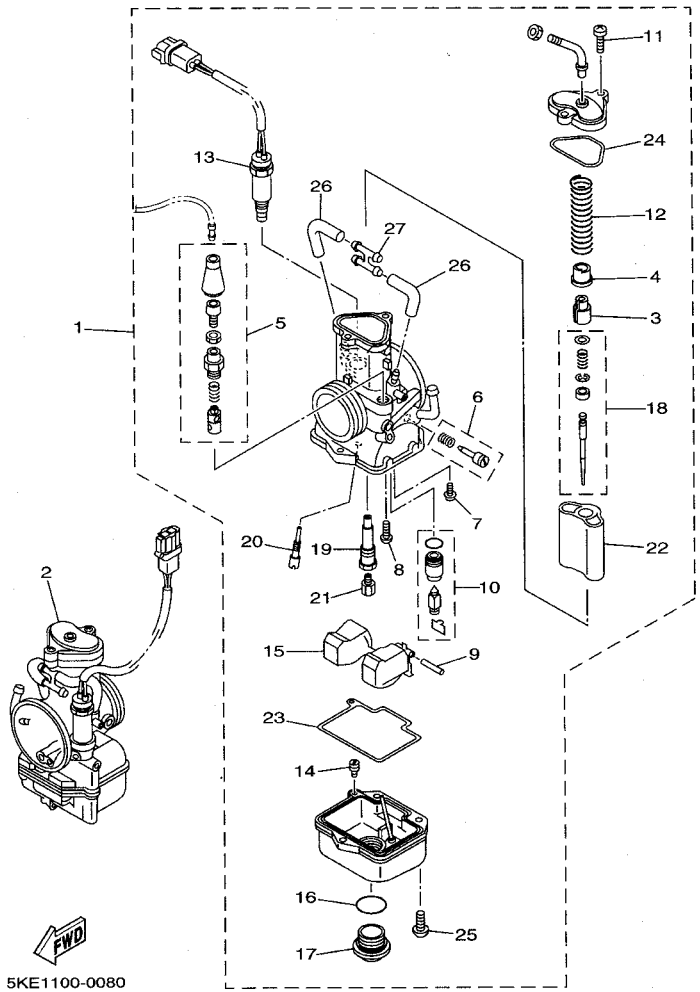

5KE1100-0080

FIG. 8 CARBURETOR

REF. NO.	PART NO.	DESCRIPTION	USA	EUR	OCE	JPN		REMARKS
27	8J0-14251-00	.NIPPLE	1	1	1	1		

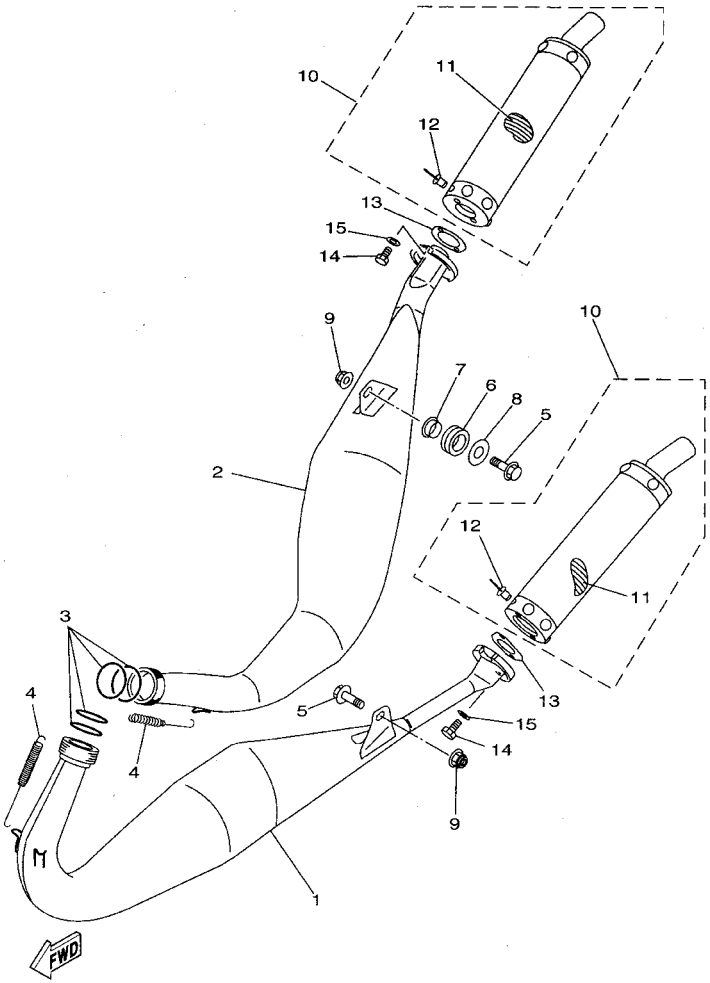

4TW4100-9090

FIG. 9 EXHAUST

REF. NO.	PART NO.	DESCRIPTION	USA	EUR	OCE	JPN		REMARKS
1	5KE-14610-10	EXHAUST PIPE ASSY 1	1					
	5KE-14610-00	EXHAUST PIPE ASSY 1		1	1	1		
2	5KE-14620-10	EXHAUST PIPE ASSY 2	1					
	5KE-14620-00	EXHAUST PIPE ASSY 2		1	1	1		
3	93210-42728	O-RING	4	4	4	4		
4	90506-20007	SPRING, TENSION	4	4	4	4		
5	95027-08030	BOLT, FLANGE	2	2	2	2		
6	90480-20389	GROMMET	1	1	1	1		
7	90387-084Y3	COLLAR	1	1	1	1		
8	90202-08022	WASHER, PLATE	1	1	1	1		
9	90185-08097	NUT, SELF-LOCKING	2	2	2	2		
10	5KE-14753-00	SILENCER, EXHAUST	2	2	2	2		
11	4JT-1469A-00	.FIBER	1	1	1	1		
12	90267-48147	.RIVET, BLIND	10	10	10	10		
13	4DP-14755-00	GASKET, SILENCER	2	2	2	2		
14	97027-06020	BOLT	4	4	4	4		
15	92907-06600	WASHER, PLATE	4	4	4	4		

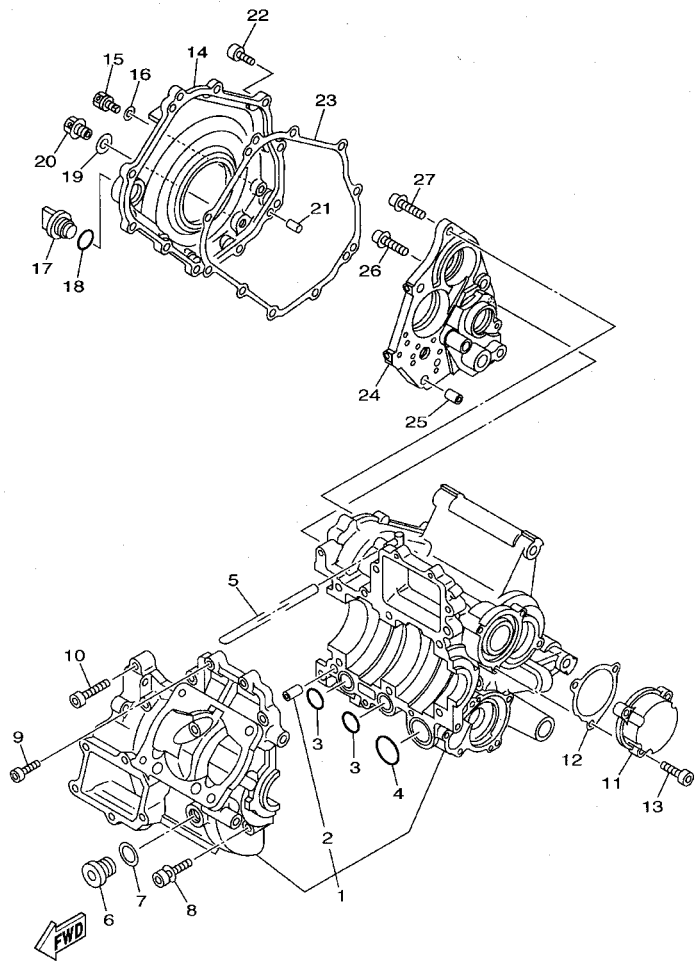

5KE1100-1100

FIG. 10 CRANKCASE

REF. NO.	PART NO.	DESCRIPTION	USA	EUR	OCE	JPN		REMARKS
1	5KE-15100-01	CRANKCASE ASSY	1	1	1	1		
2	99530-10014	.PIN, DOWEL	2	2	2	2		
3	93210-19758	O-RING	2	2	2	2		
4	93210-28543	O-RING	1	1	1	1		
5	90445-093H5	HOSE (L330)	1	1	1	1		
6	90340-18101	PLUG, STRAIGHT SCREW	1	1	1	1		
7	90201-183H2	WASHER, PLATE	1	1	1	1		
8	90109-084F1	BOLT	6	6	6	6		
9	91317-06030	BOLT	6	6	6	6		
10	91314-06035	BOLT	3	3	3	3		
11	5KE-15411-00	COVER, CRANKCASE 1	1	1	1	1		
12	5KE-15451-00	GASKET, CRANKCASE COVER 1	1	1	1	1		
13	91317-06025	BOLT	3	3	3	3		
14	5KE-15421-00	COVER, CRANKCASE 2	1	1	1	1		
15	90338-06041	PLUG	1	1	1	1		
16	90430-06166	GASKET	1	1	1	1		
17	4A0-15363-00	PLUG, OIL	1	1	1	1		
18	93210-21190	O-RING	1	1	1	1		
19	90430-12202	GASKET	1	1	1	1		
20	90340-12144	PLUG, STRAIGHT SCREW	1	1	1	1		
21	93606-12019	PIN, DOWEL	2	2	2	2		
22	91317-06020	BOLT	10	10	10	10		
23	5KE-15461-00	GASKET, CRANKCASE COVER 2	1	1	1	1		
24	5KE-15131-00	CRANKCASE 3	1	1	1	1		
25	99530-10014	PIN, DOWEL	2	2	2	2		
26	90109-06028	BOLT	2	2	2	2		
27	90109-06029	BOLT	4	4	4	4		

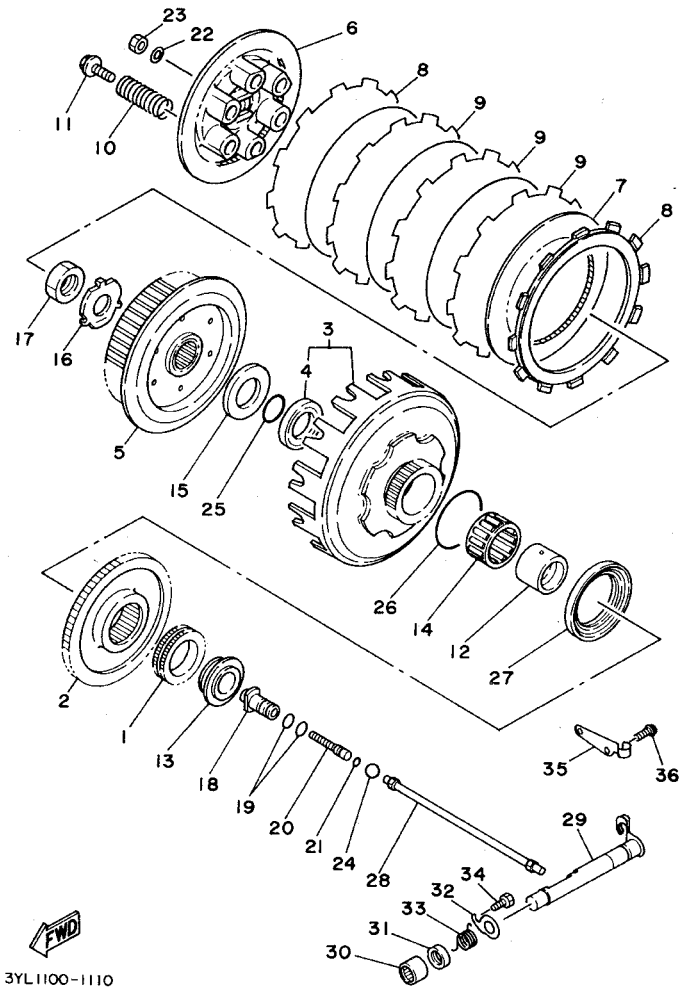

FIG. 11 CLUTCH

REF. NO.	PART NO.	DESCRIPTION	USA	EUR	OCE	JPN		REMARKS
1	4DP-13324-00	GEAR, PUMP DRIVE	1	1	1	1		
2	5KE-16151-00	GEAR, PRIMARY DRIVEN	1	1	1	1		
3	5KE-16310-00	CLUTCH HOUSING ASSY	1	1	1	1		
4	93102-30243	OIL SEAL	1	1	1	1		
5	3R4-16371-00	BOSS, CLUTCH	1	1	1	1		
6	26J-16351-00	PLATE, PRESSURE 1	1	1	1	1		
7	168-16324-00	PLATE, CLUTCH 1	5	5	5	5		
8	3YL-16321-01	PLATE, FRICTION	2	2	2	2		
9	3AK-16321-00	PLATE, FRICTION	4	4	4	4		
10	90501-230A5	SPRING, COMPRESSION	6	6	6	6		
11	90159-06016	SCREW, WITH WASHER	6	6	6	6		
12	5F7-16181-00	SPACER 1	1	1	1	1		
13	3YL-16154-00	PLATE, THRUST 1	1	1	1	1		
14	93310-332J5	BEARING	1	1	1	1		
15	5F7-16153-00	WASHER, THRUST	1	1	1	1		
16	90215-20212	WASHER, LOCK	1	1	1	1		
17	90170-20255	NUT	1	1	1	1		
18	59W-16356-00	ROD, PUSH 1	1	1	1	1		
19	93210-09165	O-RING	2	2	2	2		
20	5F7-16343-00	SCREW, ADJUSTING	1	1	1	1		
21	93210-04279	O-RING	1	1	1	1		
22	92907-06200	WASHER	1	1	1	1		
23	95307-06600	NUT	1	1	1	1		
24	93515-32029	BALL	1	1	1	1		
25	93210-22164	O-RING	1	1	1	1		
26	93210-42482	O-RING	1	1	1	1		
27	93101-56095	OIL SEAL	1	1	1	1		

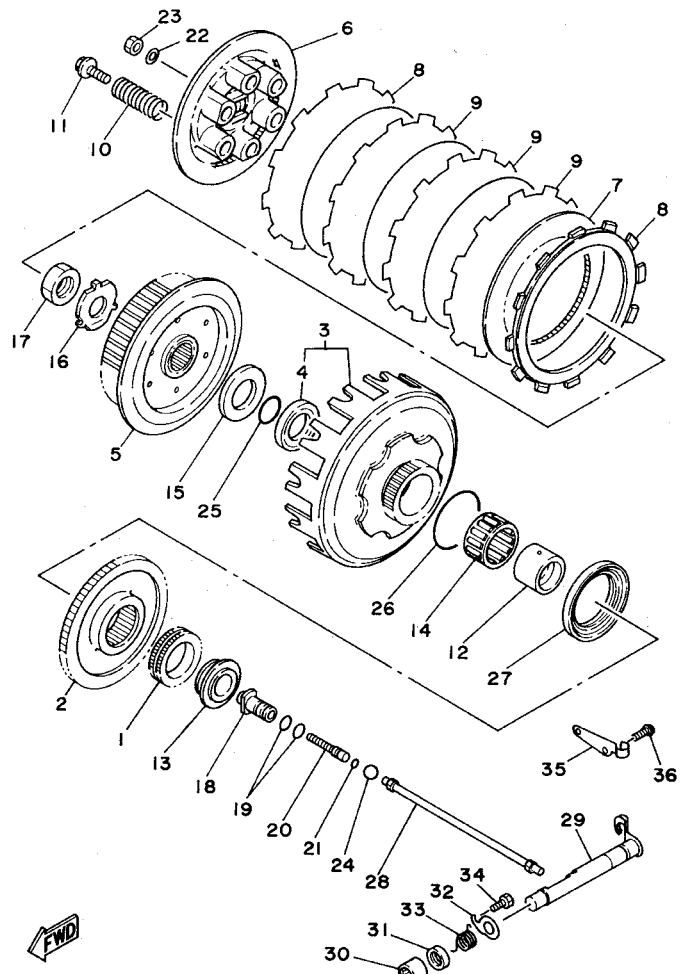

FIG. 11 CLUTCH

REF. NO.	PART NO.	DESCRIPTION	USA	EUR	OCE	JPN		REMARKS
28	5KE-16357-00	ROD, PUSH 2	1	1	1	1		
29	5KE-16381-00	PUSH LEVER COMP.	1	1	1	1		
30	93315-11206	BEARING	1	1	1	1		
31	93102-12224	OIL SEAL	1	1	1	1		
32	3XV-16384-00	PLATE, SEAT	1	1	1	1		
33	90508-121A2	SPRING, TORSION	1	1	1	1		
34	91317-05010	BOLT	1	1	1	1		
35	3YL-15441-00	HOLDER, CLUTCH CABLE	1	1	1	1		
36	95027-06012	BOLT, FLANGE	2	2	2	2		

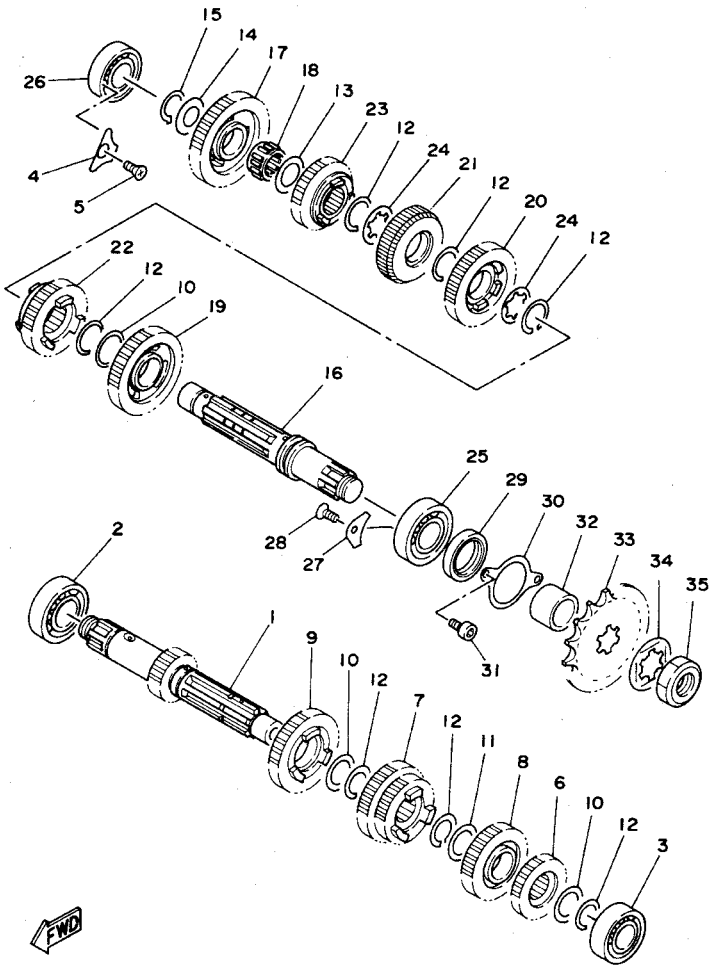

FIG. 12 TRANSMISSION

REF. NO.	PART NO.	DESCRIPTION	USA	EUR	OCE	JPN		REMARKS
1	5KE-17411-20	AXLE, MAIN (18T)	1	1	1	1		STD
	5KE-17411-10	AXLE, MAIN (14T)	1	1	1	1		AP
2	93306-20526	BEARING (B6205)	1	1	1	1		
3	93306-00442	BEARING	1	1	1	1		
4	5KE-15381-00	PLATE, BEARING COVER	1	1	1	1		
5	90151-06001	SCREW, COUNTERSUNK	1	1	1	1		
6	4DP-17121-11	GEAR, 2ND PINION (21T)	1	1	1	1		
7	5KE-17131-00	GEAR, 3RD/4TH PINION (23T/25T)	1	1	1	1		STD
	5KE-17131-10	GEAR, 3RD/4TH PINION (21T/25T)	1	1	1	1		AP
8	5F7-17151-01	GEAR, 5THPINION (27T)	1	1	1	1		
9	5KE-17161-01	GEAR, 6TH PINION (22T)	1	1	1	1		STD
	5KE-17161-11	GEAR, 6TH PINION (25T)	1	1	1	1		AP
10	90201-253K0	WASHER, PLATE (T=1.0)	3	3	3	3		UN
	90201-256E6	WASHER, PLATE (T=0.9)	3	3	3	3		UN
11	90201-256E4	WASHER, PLATE (T=1.5)	1	1	1	1		
12	93440-25084	CIRCLIP	7	7	7	7		
13	90201-20276	WASHER, PLATE (1.0T)	1	1	1	1		
14	90201-20276	WASHER, PLATE (1.0T)	1	1	1	1		UN
	90201-206E5	WASHER, PLATE (0.9T)	1	1	1	1		UN
15	99009-20400	CIRCLIP	1	1	1	1		
16	5KE-17421-00	AXLE, DRIVE	1	1	1	1		
17	5KE-17211-20	GEAR, 1ST WHEEL (34T)	1	1	1	1		STD
	5KE-17211-10	GEAR, 1ST WHEEL (28T)	1	1	1	1		AP
18	93310-22057	BEARING (K20-24X10 S)	1	1	1	1		
19	4DP-17221-11	GEAR, 2ND WHEEL (31T)	1	1	1	1		
20	5KE-17231-00	GEAR, 3RD WHEEL (29T)	1	1	1	1		STD
	5KE-17231-10	GEAR, 3RD WHEEL (26T)	1	1	1	1		AP

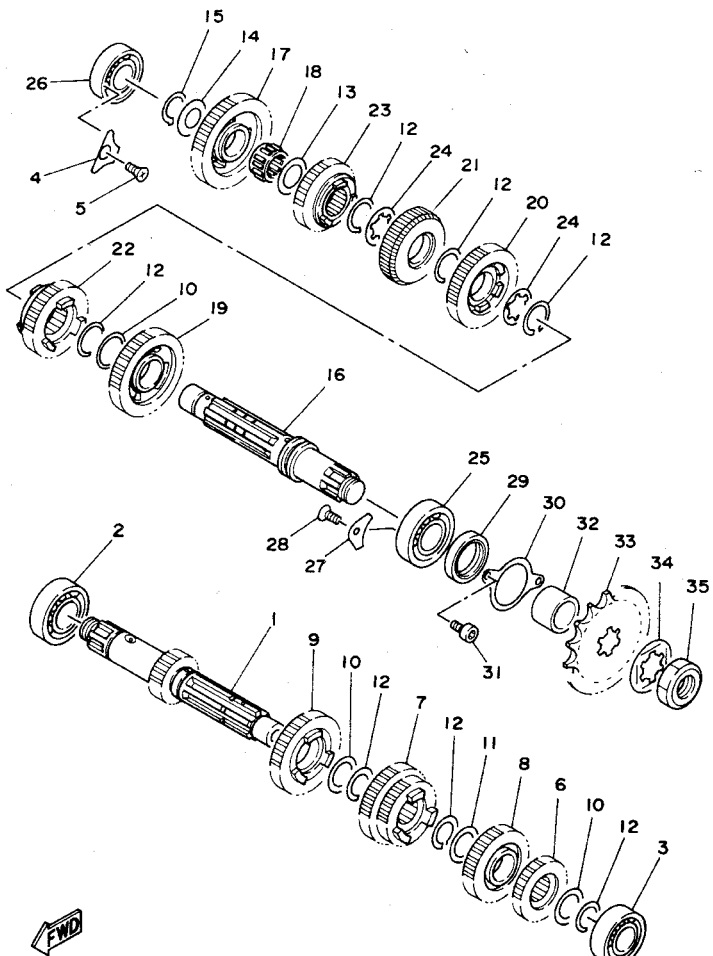

FIG. 12 TRANSMISSION

REF. NO.	PART NO.	DESCRIPTION	USA	EUR	OCE	JPN		REMARKS
21	5KE-17241-00	GEAR, 4TH WHEEL (27T)	1	1	1	1		
22	3YL-17251-00	GEAR, 5TH. WHEEL (26T)	1	1	1	1		
23	5KE-17261-01	GEAR, 6TH WHEEL (20T)	1	1	1	1		STD
	5KE-17261-11	GEAR, 6TH WHEEL (22T)	1	1	1	1		AP
24	5F7-17136-00	WASHER (0.7T)	2	2	2	2		UN
	90209-22082	WASHER (0.5T)	2	2	2	2		UN
25	93306-20574	BEARING	1	1	1	1		
26	93306-20470	BEARING	1	1	1	1		
27	4JT-15381-01	PLATE, BEARING COVER	1	1	1	1		
28	90151-06001	SCREW, COUNTERSUNK	1	1	1	1		
29	93102-32337	OIL SEAL	1	1	1	1		
30	3AK-17471-00	PLATE, COVER	1	1	1	1		
31	91317-05012	BOLT	2	2	2	2		
32	90387-25001	COLLAR	1	1	1	1		
33	93834-14178	SPROCKET, DRIVE (14T)	1	1	1	1		STD
	93834-15079	SPROCKET,DRIVE (15T)	1	1	1	1		AP
	93834-16104	SPROCKET,DRIVE (16T)	1	1	1	1		AP
34	90215-21121	WASHER, LOCK	1	1	1	1		
35	90179-20255	NUT	1	1	1	1		

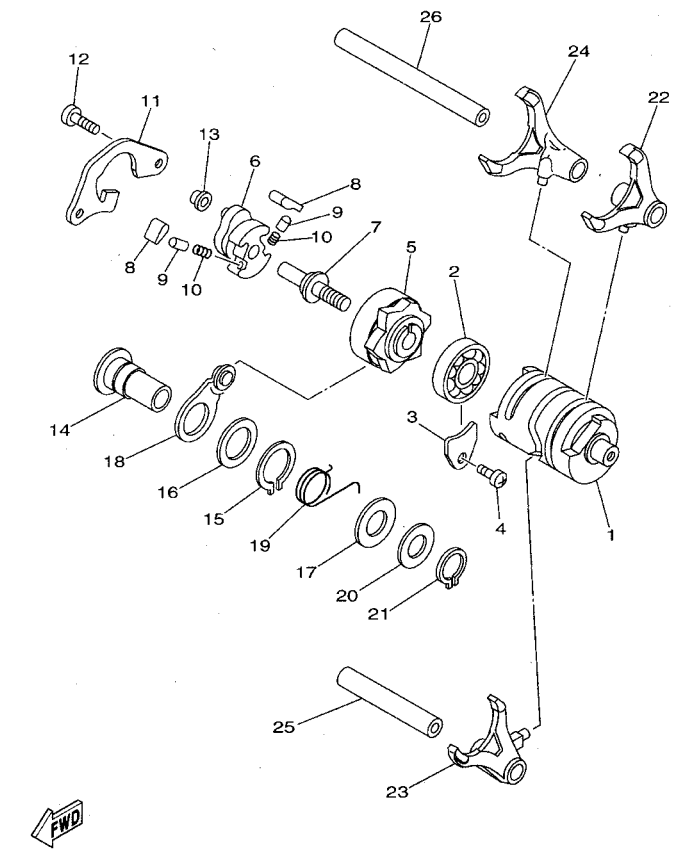

5KE1100-0130

FIG. 13 SHIFT CAM. FORK

REF. NO.	PART NO.	DESCRIPTION	USA	EUR	OCE	JPN		REMARKS
1	5KE-18541-00	CAM, SHIFT	1	1	1	1		
2	93306-90302	BEARING	1	1	1	1		
3	3XV-18562-00	PLATE, STOPPER 2	1	1	1	1		
4	90157-05004	SCREW, PAN HEAD	1	1	1	1		
5	3YL-18185-00	SEGMENT	1	1	1	1		
6	3XV-18122-00	LEVER, SHIFT 2	1	1	1	1		
7	3XV-18173-00	PIN, SHIFT	1	1	1	1		
8	3YL-18182-00	PAWL, SHIFTER	2	2	2	2		
9	3YL-18184-00	PIN, PAWL	2	2	2	2		
10	90501-052G5	SPRING, COMPRESSION	2	2	2	2		
11	5KE-18172-00	GUIDE, SHIFT	1	1	1	1		
12	91318-06014	BOLT	2	2	2	2		
13	3XJ-18178-00	ROLLER, SHIFT LEVER	1	1	1	1		
14	90387-127V3	COLLAR	1	1	1	1		
15	99009-17400	CIRCLIP	1	1	1	1		
16	90201-177G4	WASHER, PLATE	1	1	1	1		
17	90201-154E8	WASHER, PLATE (1.0T)	1	1	1	1		
18	3XV-18140-00	STOPPER LEVER ASSY	1	1	1	1		
19	90508-231A5	SPRING, TORSION	1	1	1	1		
20	90201-127E1	WASHER, PLATE	1	1	1	1		
21	99009-12400	CIRCLIP	1	1	1	1		
22	5KE-18511-00	FORK, SHIFT 1	1	1	1	1		
23	5KE-18512-00	FORK, SHIFT 2	1	1	1	1		
24	5KE-18513-00	FORK, SHIFT 3	1	1	1	1		
25	3XV-18531-00	BAR, SHIFT FORK GUIDE 1	1	1	1	1		
26	5KE-18535-00	BAR, SHIFT FORK GUIDE 2	1	1	1	1		

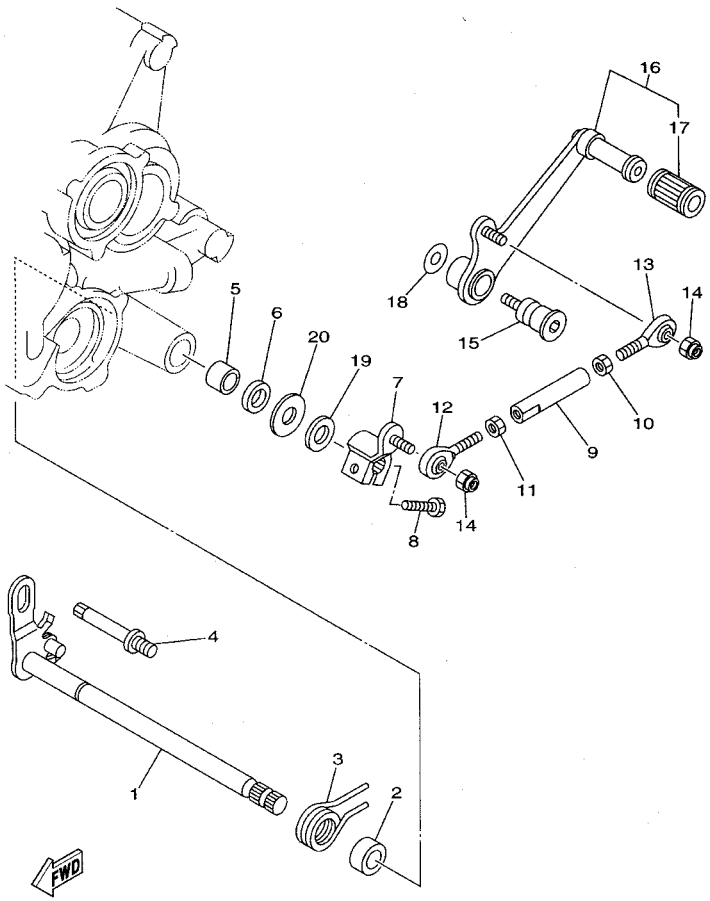

5KE1100-0140

FIG. 14 SHIFT SHAFT

REF. NO.	PART NO.	DESCRIPTION	USA	EUR	OCE	JPN		REMARKS
1	5KE-18101-00	SHIFT SHAFT ASSY	1	1	1	1		
2	90560-12361	SPACER	1	1	1	1		
3	90508-29742	SPRING, TORSION	1	1	1	1		
4	3MA-18127-00	STOPPER, SCREW	1	1	1	1		
5	90383-12013	BUSH, FORMED	1	1	1	1		
6	93109-12012	OIL SEAL	1	1	1	1		
7	4DP-18112-00	ARM, SHIFT	1	1	1	1		
8	97017-06020	BOLT	1	1	1	1		
9	5KE-18115-00	ROD, SHIFT	1	1	1	1		
10	90170-06228	NUT (COUNTER CLOCKWISE)	1	1	1	1		
11	95304-06700	NUT	1	1	1	1		
12	3TC-18116-00	JOINT, ROD 1	1	1	1	1		
13	3TC-18117-00	JOINT, ROD 2	1	1	1	1		
14	95607-06100	NUT, U	2	2	2	2		
15	90109-087F6	BOLT	1	1	1	1		
16	4DP-18110-00	SHIFT PEDAL ASSY	1	1	1	1		
17	3FV-18113-00	.COVER, SHIFT PEDAL	1	1	1	1		
18	90201-087F0	WASHER, PLATE	1	1	1	1		
19	90560-12075	SPACER	1	1	1	1		
20	90201-12588	WASHER, PLATE	1	1	1	1		

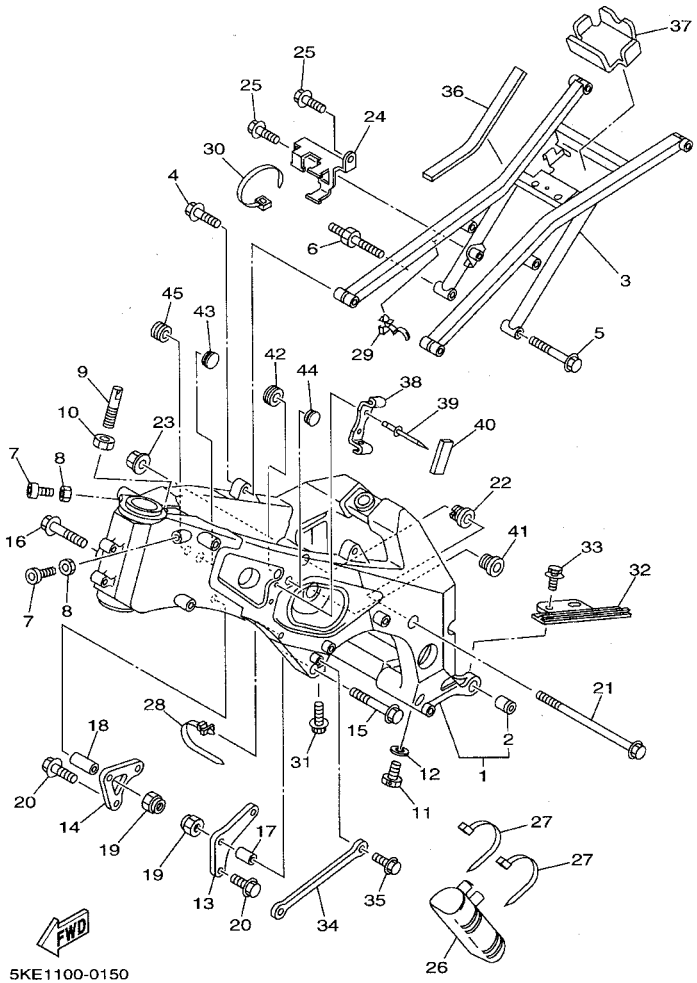

FIG. 15 FRAME

REF. NO.	PART NO.	DESCRIPTION	USA	EUR	OCE	JPN		REMARKS
1	5KE-21110-00	FRAME COMP.	1	1	1	1		
2	36Y-27414-00	.DAMPER, FOOTREST	1	1	1	1		
3	4TW-21190-02	REAR FRAME COMP.	1	1	1	1		
4	95827-06025	BOLT, FLANGE	2	2	2	2		
5	95827-06045	BOLT, FLANGE	1	1	1	1		
6	5KE-2171V-00	BOLT	1	1	1	1		
7	91317-06020	BOLT	2	2	2	2		
8	95307-06600	NUT	2	2	2	2		
9	5KE-2134T-00	BOLT, TANK FITTING	1	1	1	1		
10	95307-08700	NUT	1	1	1	1		
11	90338-06041	PLUG	2	2	2	2		
12	90430-06166	GASKET	2	2	2	2		
13	5KE-21411-00	BRACKET, ENGINE 1	1	1	1	1		
14	5KE-21419-00	BRACKET, ENGINE 2	1	1	1	1		
15	95827-10045	BOLT, FLANGE	1	1	1	1		
16	95827-10060	BOLT, FLANGE	1	1	1	1		
17	5KE-2119R-00	SLEEVE	1	1	1	1		
18	5KE-2119T-00	SLEEVE 2	1	1	1	1		
19	95607-10200	NUT, SELF-LOCKING	2	2	2	2		
20	95027-08020	BOLT, FLANGE	4	4	4	4		
21	90105-10300	BOLT, WASHER BASED	2	2	2	2		
22	4JT-21495-10	BOLT, ENGINE ADJUSTING	2	2	2	2		
23	90179-10696	NUT	2	2	2	2		
24	5KE-2134V-00	BRACKET	1	1	1	1		
25	95027-06012	BOLT, FLANGE	2	2	2	2		
26	3YL-21751-00	TANK, OIL	1	1	1	1		
27	90465-13275	CLAMP	2	2	2	2		

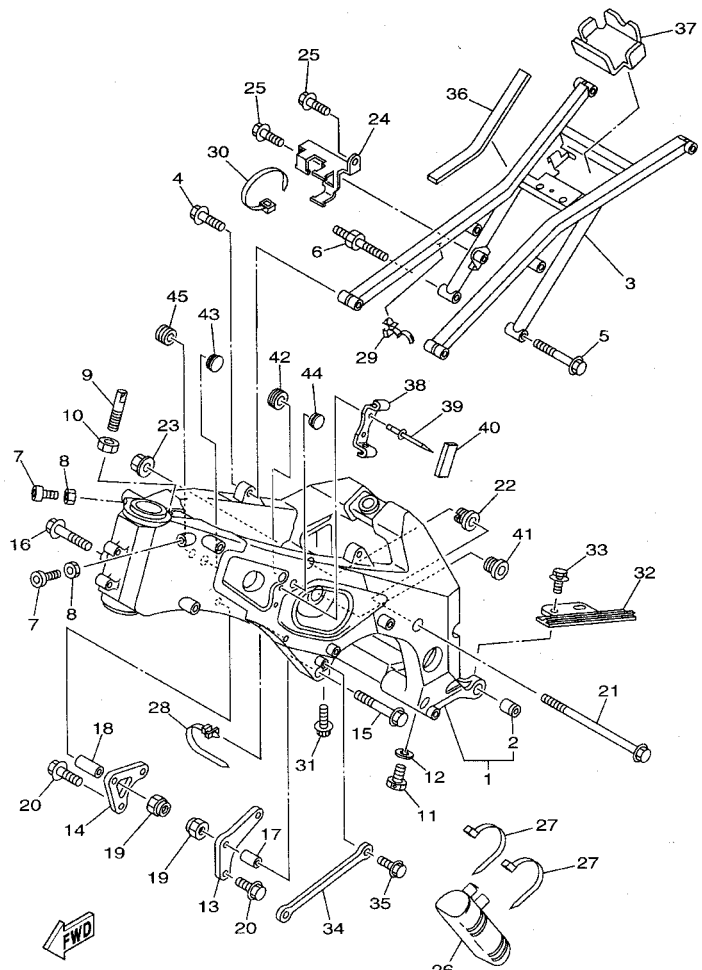

FIG. 15 FRAME

REF. NO.	PART NO.	DESCRIPTION	USA	EUR	OCE	JPN		REMARKS
28	90464-12089	CLAMP	2	2	2	2		
29	90464-18246	CLAMP	3	3	3	3		
30	90465-13152	CLAMP	1	1	1	1		
31	90109-067E6	BOLT	2	2	2	2		
32	4TW-22151-00	SEAL, GUARD	1	1	1	1		
33	90119-05239	BOLT, WITH WASHER	2	2	2	2		
34	4TW-2117A-00	STAY	1	1	1	1		
35	95027-06012	BOLT, FLANGE	1	1	1	1		
36	1KT-82122-00	SEAT, BATTERY	2	2	2	2		
37	5KE-21747-00	DAMPER	1	1	1	1		
38	5KE-2139V-00	HOOK	1	1	1	1		
39	90267-32018	RIVET, BLIND	2	2	2	2		
40	50M-21638-00	DAMPER 1	1	1	1	1		
41	4DP-21495-00	BOLT, ENGINE ADJUSTING	1	1	1	1		
42	90480-18276	GROMMET	1	1	1	1		
43	90338-18266	PLUG	1	1	1	1		
44	90480-14153	GROMMET	1	1	1	1		
45	90480-14585	GROMMET	1	1	1	1		

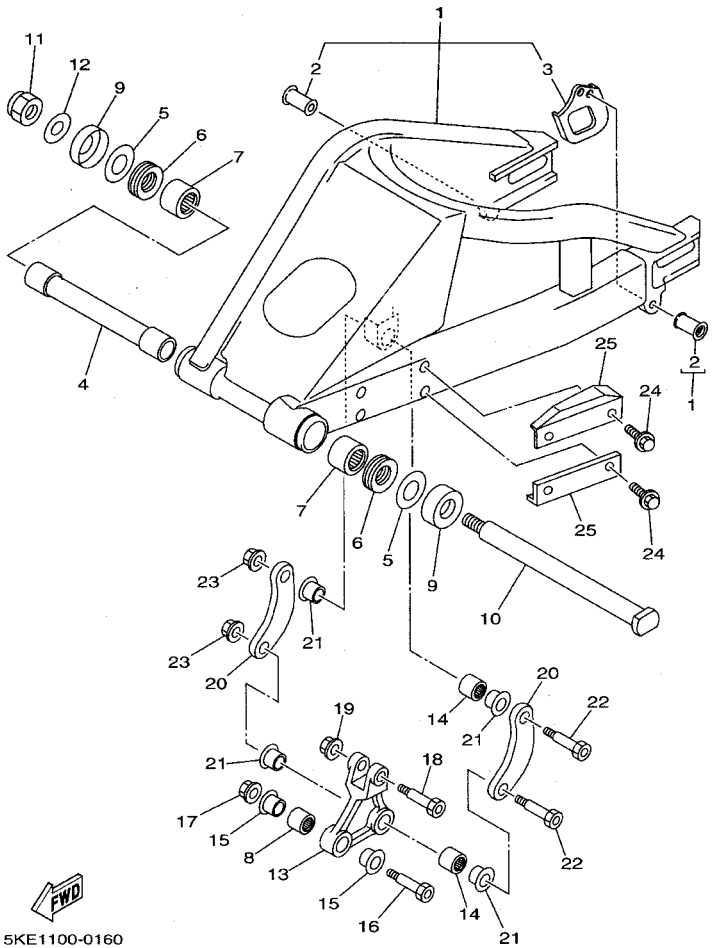

FIG. 16 REAR ARM

REF. NO.	PART NO.	DESCRIPTION	USA	EUR	OCE	JPN		REMARKS
1	4TW-22110-02	REAR ARM COMP.	1	1	1	1		
2	4JT-2216F-10	.HOOK	2	2	2	2		
3	4TW-22187-10	.GUIDE, CHAIN	1	1	1	1		
4	3XV-22184-00	BUSH	1	1	1	1		
5	1X2-22127-00	SHIM	2	2	2	2		
6	93342-22516	BEARING	2	2	2	2		
7	93315-42523	BEARING	2	2	2	2		
8	93320-21507	BEARING	1	1	1	1		
9	3FV-22128-00	COVER, THRUST 1	2	2	2	2		
10	3MA-22141-01	SHAFT, PIVOT	1	1	1	1		
11	90185-18104	NUT, SELF-LOCKING	1	1	1	1		
12	92907-18200	WASHER	1	1	1	1		
13	5KE-2217A-00	ARM, RELAY	1	1	1	1		
14	93320-21507	BEARING	2	2	2	2		
15	90387-124Y8	COLLAR	2	2	2	2		
16	90101-10709	BOLT	1	1	1	1		
17	95607-10200	NUT, SELF-LOCKING	1	1	1	1		
18	90101-10709	BOLT	1	1	1	1		
19	95607-10200	NUT, SELF-LOCKING	1	1	1	1		
20	5KE-2217F-00	ROD, CONNECTING 1	2	2	2	2		
21	90387-124Y8	COLLAR	4	4	4	4		
22	90101-10709	BOLT	2	2	2	2		
23	95607-10200	NUT, SELF-LOCKING	2	2	2	2		
24	90119-06227	BOLT, WITH WASHER	4	4	4	4		
25	4TW-22147-00	PROTECTOR, CHAIN	2	2	2	2		

FIG. 17 REAR SUSPENSION

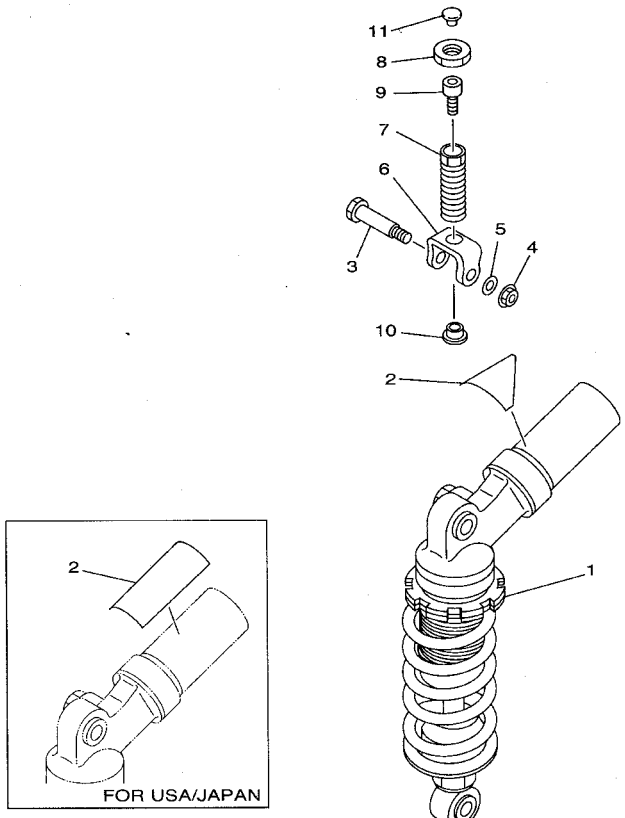

4TW4100-9170

REF. NO.	PART NO.	DESCRIPTION	USA	EUR	OCE	JPN		REMARKS
1	5KE-22210-00	SHOCK ABSORBER ASSY, REAR	1	1	1	1		
2	4AA-22259-80	LABEL, WARNING	1					
	4AA-22259-40	LABEL, WARNING		1	1			
	4AA-22259-50	LABEL, WARNING				1		
3	90101-10709	BOLT	1	1	1	1		
4	95607-10200	NUT, SELF-LOCKING	1	1	1	1		
5	90201-127J6	WASHER, PLATE	1	1	1	1		
6	4JT-22219-00	BRACKET, UPPER	1	1	1	1		
7	4JT-22239-00	ADJUSTER	1	1	1	1		
8	1RK-22251-00	NUT 1	1	1	1	1		
9	91317-10016	BOLT	1	1	1	1		
10	3AK-22252-00	NUT	1	1	1	1		
11	90480-14153	GROMMET	1	1	1	1		

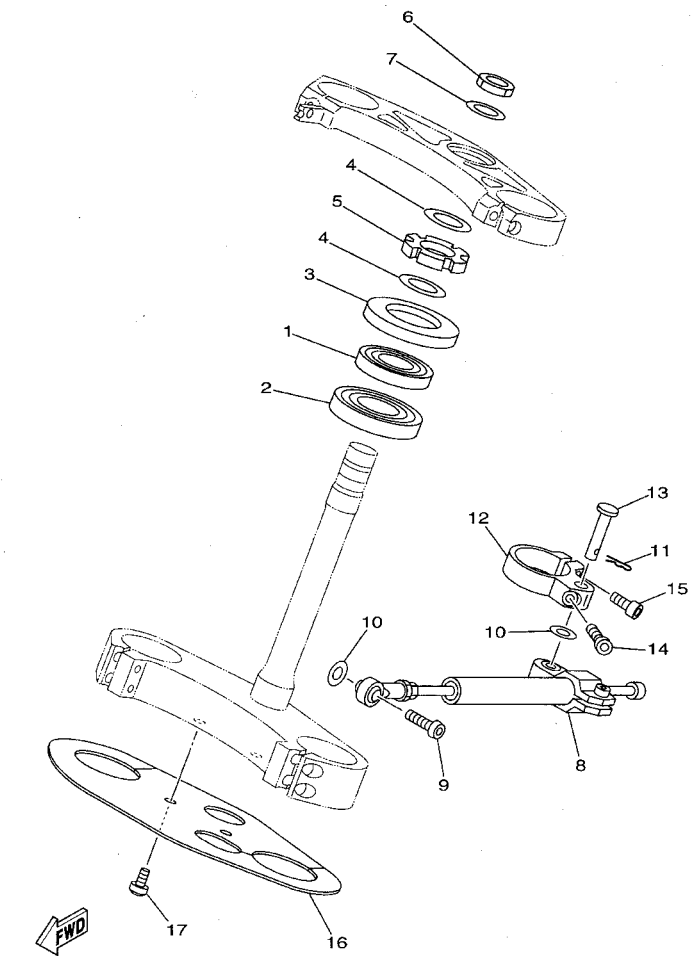

5KE2100-1180

FIG. 18 STEERING

REF. NO.	PART NO.	DESCRIPTION	USA	EUR	OCE	JPN		REMARKS
1	93332-00001	BEARING	1	1	1	1		
2	93332-00081	BEARING	1	1	1	1		
3	1J7-23415-00	COVER, BALL RACE 1	1	1	1	1		
4	90201-25526	WASHER, PLATE (T2.0)	2	2	2	2		
5	90179-25033	NUT	1	1	1	1		
6	1RK-22251-00	NUT 1	1	1	1	1		
7	90201-225A4	WASHER, PLATE (T=1.0)	1	1	1	1		
8	5KE-23490-00	HANDLEBAR SHIMMY DAMPER ASSY	1	1	1	1		
9	92017-08025	BOLT, BUTTON HEAD	1	1	1	1		
10	90201-08455	WASHER, PLATE	2	2	2	2		
11	90468-16099	CLIP	1	1	1	1		
12	5KE-23495-00	STAY, DAMPER	1	1	1	1		
13	91701-08038	PIN, CLEVIS	1	1	1	1		
14	91317-05016	BOLT	1	1	1	1		
15	91317-06020	BOLT	1	1	1	1		
16	5KE-21552-10	FENDER, INNER	1	1	1	1		
17	98907-06010	SCREW, BIND	2	2	2	2		

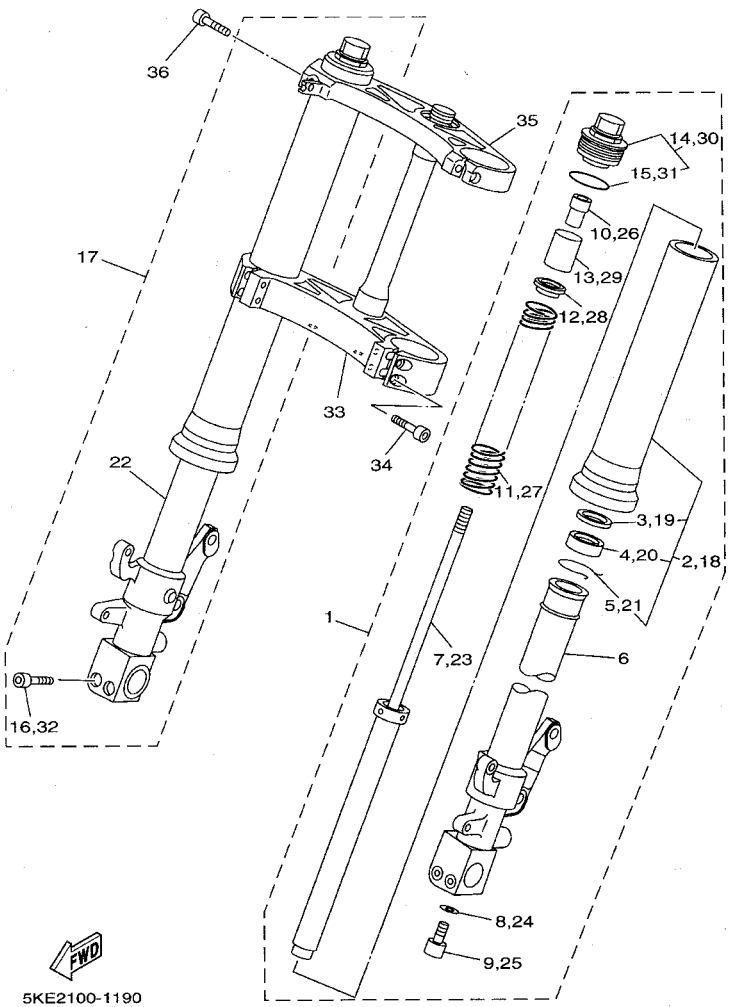

FIG. 19 FRONT FORK

REF. NO.	PART NO.	DESCRIPTION	USA	EUR	OCE	JPN		REMARKS
1	5KE-23102-10	FRONT FORK ASSY (L.H)	1	1	1	1		
2	5KE-23136-00	.TUBE, OUTER (RIGHT)	1	1	1	1		
3	36Y-23146-10	..WASHER, OIL SEAL	1	1	1	1		
4	3JD-23145-L0	..OIL SEAL	1	1	1	1		
5	26H-23156-00	..CLIP, OIL SEAL	1	1	1	1		
6	5KE-23110-10	.INNER TUBE COMP.1	1	1	1	1		
7	5KE-23170-10	.CYLINDER COMP., FRONT FORK	1	1	1	1		
8	2K8-23158-L0	.GASKET	1	1	1	1		
9	3LC-23181-00	.BOLT, HEXAGON SOCKET HEAD	1	1	1	1		
10	4TW-23357-10	.NUT	1	1	1	1		
11	3YL-23141-00	.SPRING, FRONT FORK	1	1	1	1		
12	4TW-23142-10	.SEAT, SPRING UPPER	1	1	1	1		
13	4TW-23118-10	.SPACER	1	1	1	1		
14	4TW-23111-10	.BOLT, CAP	1	1	1	1		
15	3SP-23147-M0	..O-RING	1	1	1	1		
16	91311-06040	.BOLT	2	2	2	2		
17	5KE-23103-10	FRONT FORK ASSY (R.H)	1	1	1	1		
18	5KE-23136-00	.TUBE, OUTER (RIGHT)	1	1	1	1		
19	36Y-23146-10	..WASHER, OIL SEAL	1	1	1	1		
20	3JD-23145-L0	..OIL SEAL	1	1	1	1		
21	26H-23156-00	..CLIP, OIL SEAL	1	1	1	1		
22	5KE-23120-10	.INNER TUBE COMP.2	1	1	1	1		
23	5KE-23170-10	.CYLINDER COMP., FRONT FORK	1	1	1	1		
24	2K8-23158-L0	.GASKET	1	1	1	1		
25	3LC-23181-00	.BOLT, HEXAGON SOCKET HEAD	1	1	1	1		
26	4TW-23357-10	.NUT	1	1	1	1		
27	3YL-23141-00	.SPRING, FRONT FORK	1	1	1	1		

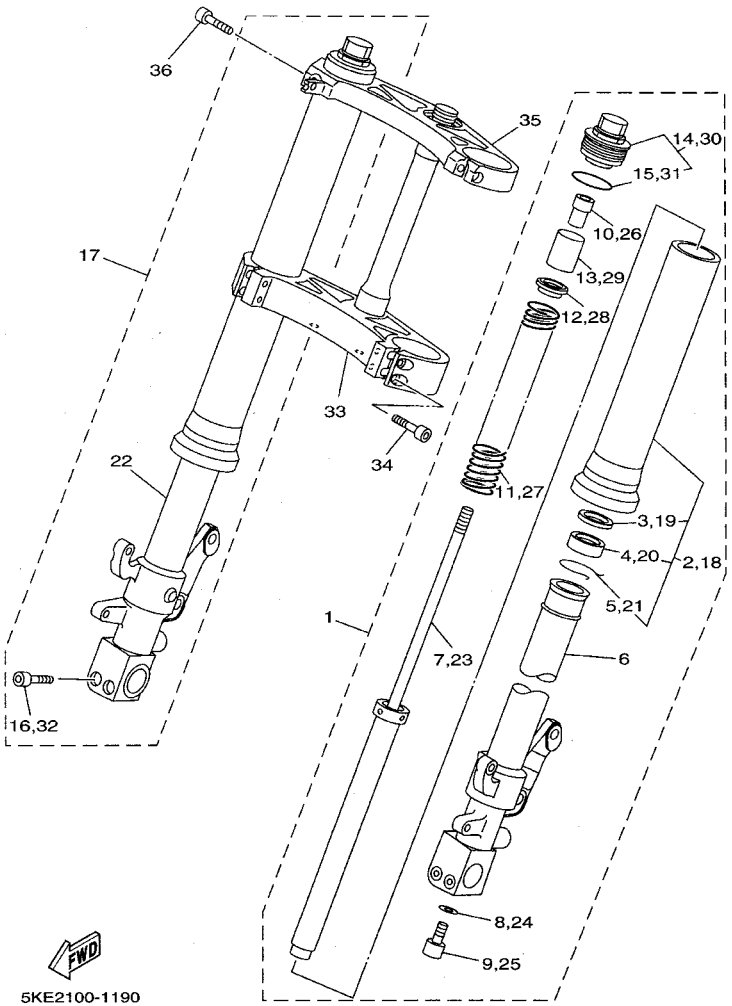

FIG. 19 FRONT FORK

REF. NO.	PART NO.	DESCRIPTION	USA	EUR	OCE	JPN		REMARKS
28	4TW-23142-10	.SEAT, SPRING UPPER	1	1	1	1		
29	4TW-23118-10	.SPACER	1	1	1	1		
30	4TW-23111-10	.BOLT, CAP	1	1	1	1		
31	3SP-23147-M0	..O-RING	1	1	1	1		
32	91311-06040	.BOLT	2	2	2	2		
33	4TW-23340-21	UNDER BRACKET COMP.	1	1	1	1		
34	91311-08035	BOLT	4	4	4	4		
35	4TW-23435-01	CROWN, HANDLE	1	1	1	1		
36	91317-08035	BOLT	2	2	2	2		

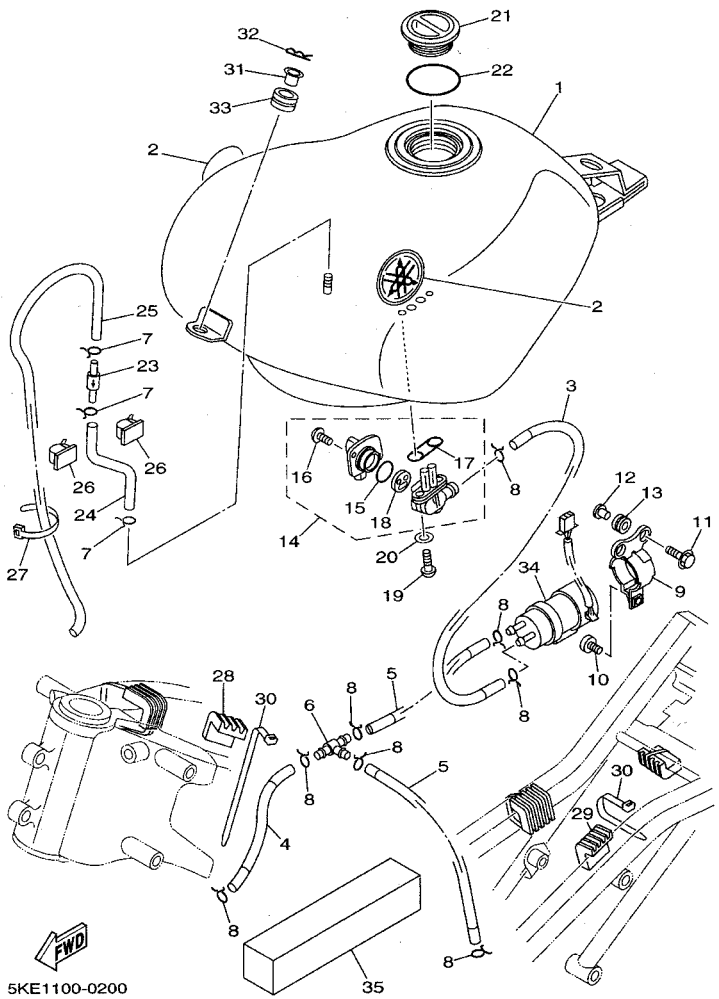

FIG. 20 FUEL TANK

REF. NO.	PART NO.	DESCRIPTION	USA	EUR	OCE	JPN		REMARKS
1	5KE-24110-00-36	FUEL TANK COMP.	1	1	1	1		WW
2	5KE-2411B-00	EMBLEM	2	2	2	2		
3	5KE-24311-00	PIPE, FUEL 1	1	1	1	1		
4	5KE-24312-00	PIPE 2	1	1	1	1		
5	5KE-24313-00	PIPE 3	2	2	2	2		
6	1X2-24376-00	JOINT, FUEL PIPE	1	1	1	1		
7	90467-09006	CLIP	3	3	3	3		
8	90467-10008	CLIP	8	8	8	8		
9	3CV-24491-10	BRACKET, FUEL PUMP	1	1	1	1		
10	98907-05008	SCREW, BIND	1	1	1	1		
11	90119-06096	BOLT, WITH WASHER	2	2	2	2		
12	90387-06737	COLLAR	2	2	2	2		
13	90480-13163	GROMMET	2	2	2	2		
14	4JT-24500-00	FUEL COCK ASSY 1	1	1	1	1		
15	3AJ-24534-00	.SEAL, COCK	1	1	1	1		
16	97801-03008	.SCREW, PAN HEAD	2	2	2	2		
17	4X8-24512-00	.O-RING	1	1	1	1		
18	3AJ-24523-00	.VALVE PACKING	1	1	1	1		
19	90149-06011	SCREW	2	2	2	2		
20	90202-05193	WASHER, PLATE	2	2	2	2		
21	4JT-24611-00	BODY, CAP	1	1	1	1		
22	4JT-24612-00	GASKET, CAP	1	1	1	1		
23	3XJ-24380-00	PIPE JOINT ASSY	1	1	1	1		
24	91A20-05020	TUBE, FLEXIBLE VINYL	1	1	1	1		
25	91A20-05065	TUBE, FLEXIBLE VINYL	1	1	1	1		
26	90464-25160	CLAMP	2	2	2	2		
27	90465-13152	CLAMP	1	1	1	1		

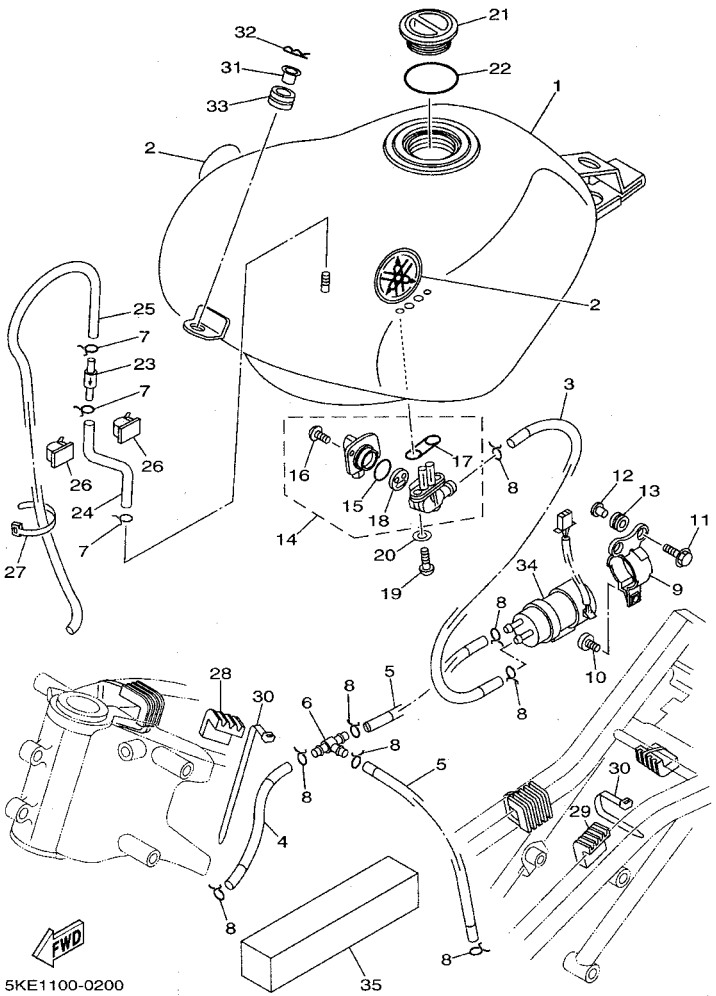

FIG. 20 FUEL TANK

REF. NO.	PART NO.	DESCRIPTION	USA	EUR	OCE	JPN		REMARKS
28	4DP-24181-00	DAMPER, LOCATING 1	2	2	2	2		
29	3LC-24182-00	DAMPER, LOCATING 2	3	3	3	3		
30	90465-13275	CLAMP	5	5	5	5		
31	90387-081F5	COLLAR	1	1	1	1		
32	4JT-2411M-00	CLIP	1	1	1	1		
33	90480-18525	GROMMET	1	1	1	1		
34	4NK-13907-00	FUEL PUMP COMP.	1	1	1	1		
35	4JT-2411R-00	PLATE 1	10	10	10	10		AP

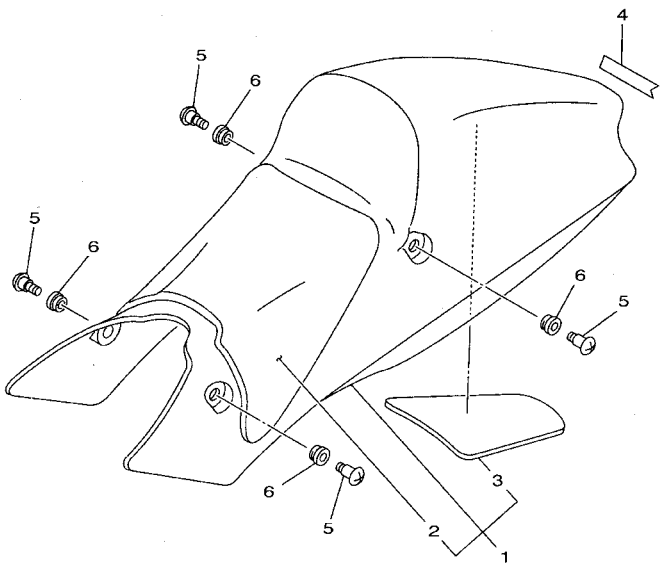

4TW3100-8210

FIG. 21 SEAT

REF. NO.	PART NO.	DESCRIPTION	USA	EUR	OCE	JPN		REMARKS
1	5KE-24710-00	SINGLE SEAT ASSY	1	1	1	1		
2	5KE-24713-00	.CUSHION	1	1	1	1		
3	4JT-24763-00	.PAD, SEAT 2	1	1	1	1		
4	99247-00100	EMBLEM, YAMAHA	2	2	2	2		
5	90150-06036	SCREW, ROUND HEAD	4	4	4	4		
6	90480-13197	GROMMET	4	4	4	4		

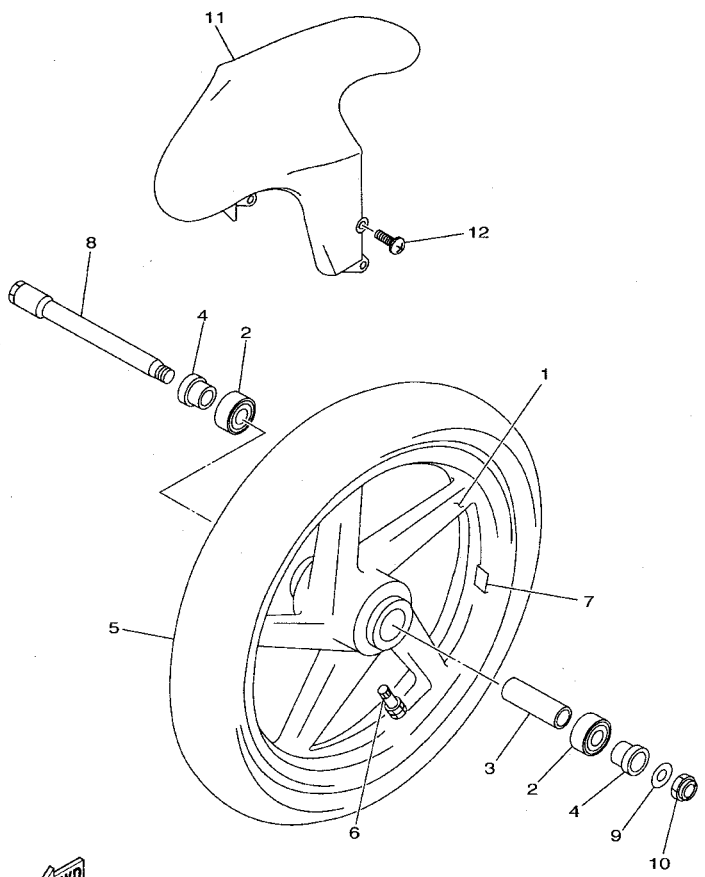

5KE1100-1220

FIG. 22 FRONT WHEEL

REF. NO.	PART NO.	DESCRIPTION	USA	EUR	OCE	JPN		REMARKS
1	4TW-25168-00	CAST WHEEL, FRONT	1	1	1	1		
2	93306-00521	BEARING	2	2	2	2		
3	4TW-25117-00	SPACER, BEARING	1	1	1	1		
4	4TW-25183-00	COLLAR, WHEEL	2	2	2	2		
5	94131-1709C	TIRE (3.10/4.80 R17 KR106)	1	1	1	1		DUNLOP
6	93900-00031	VALVE, RIM	1	1	1	1		
7	4TW-25398-00	BALANCER, WHEEL	1	1	1	1		UN
8	4DP-25181-10	AXLE, WHEEL	1	1	1	1		
9	90201-183E1	WASHER, PLATE	1	1	1	1		
10	90185-18104	NUT, SELF-LOCKING	1	1	1	1		
11	4TW-21510-00	FRONT FENDER COMP.	1	1	1	1		
12	90150-06021	SCREW, ROUND HEAD	4	4	4	4		

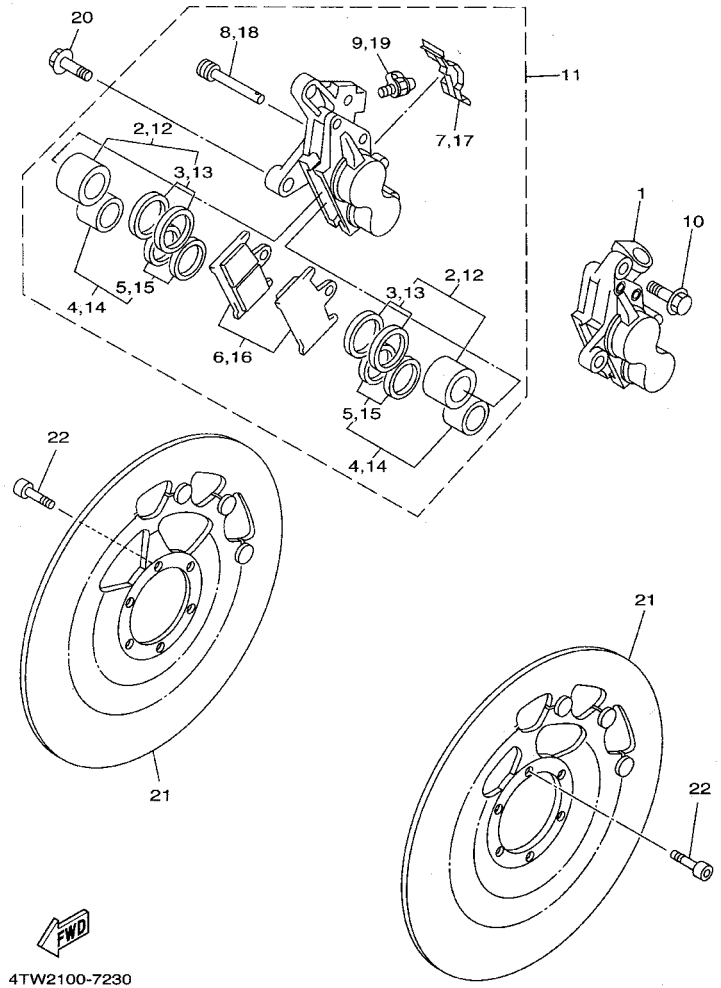

FIG. 23 FRONT BRAKE CALIPER

REF. NO.	PART NO.	DESCRIPTION	USA	EUR	OCE	JPN		REMARKS
1	4TW-2580T-10	CALIPER ASSY (LEFT)	1	1	1	1		
2	4TW-W0057-00	.PISTON ASSY, CALIPER	1	1	1	1		
3	4TW-W0047-00	..CALIPER SEAL KIT	1	1	1	1		
4	4TW-W0057-10	.PISTON ASSY, CALIPER	1	1	1	1		
5	4TW-W0047-10	..CALIPER SEAL KIT	1	1	1	1		
6	4TW-W0045-10	.BRAKE PAD KIT	1	1	1	1		
7	3FV-25919-00	.SUPPORT, PAD	1	1	1	1		
8	3FV-25924-00	.PIN, PAD	1	1	1	1		
9	1UY-W0048-50	.BLEED SCREW KIT	1	1	1	1		
10	90105-105A7	BOLT, WASHER BASED	2	2	2	2		
11	4TW-2580U-10	CALIPER ASSY (RIGHT)	1	1	1	1		
12	4TW-W0057-00	.PISTON ASSY, CALIPER	1	1	1	1		
13	4TW-W0047-00	..CALIPER SEAL KIT	1	1	1	1		
14	4TW-W0057-10	.PISTON ASSY, CALIPER	1	1	1	1		
15	4TW-W0047-10	..CALIPER SEAL KIT	1	1	1	1		
16	4TW-W0045-10	.BRAKE PAD KIT	1	1	1	1		
17	3FV-25919-00	.SUPPORT, PAD	1	1	1	1		
18	3FV-25924-00	.PIN, PAD	1	1	1	1		
19	1UY-W0048-50	.BLEED SCREW KIT	1	1	1	1		
20	90105-105A7	BOLT, WASHER BASED	2	2	2	2		
21	4JT-2581T-00	DISC BRAKE ASSY	2	2	2	2		
22	90110-08193	BOLT, HEXAGON SOCKET HEAD	12	12	12	12		

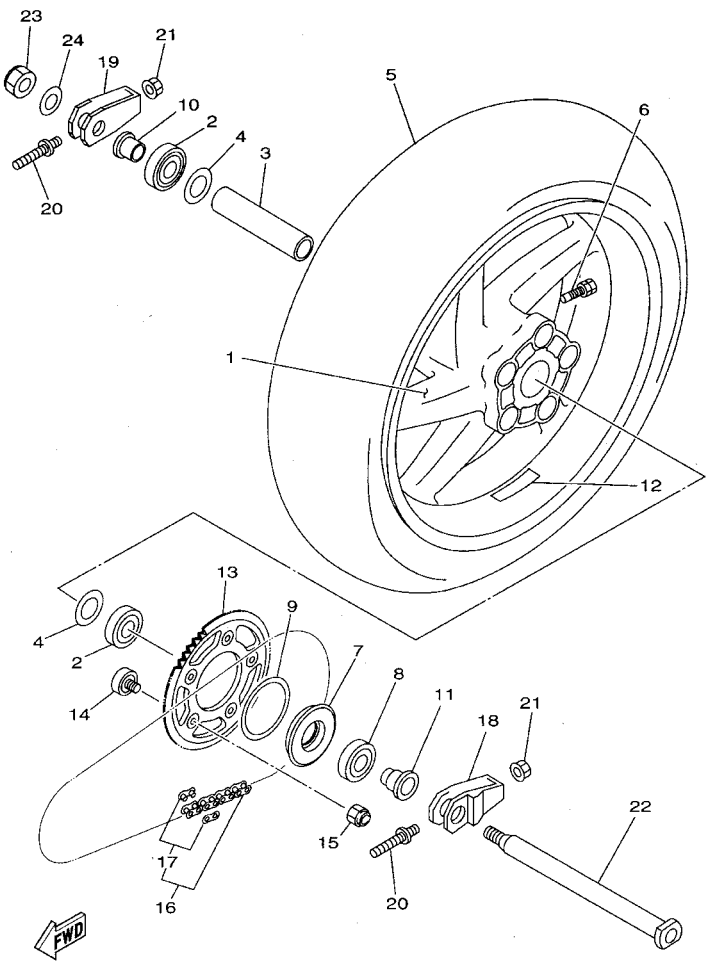

5KE2100-1240

FIG. 24 REAR WHEEL

REF. NO.	PART NO.	DESCRIPTION	USA	EUR	OCE	JPN		REMARKS
1	5KE-25338-00	CAST WHEEL, REAR	1	1	1	1		
2	93306-00521	BEARING	2	2	2	2		
3	4TW-25317-00	SPACER, BEARING	1	1	1	1		
4	4DP-2518A-00	PLATE, FITTING	2	2	2	2		
5	94116-1713M	TIRE (165/55 ZR17 KR108)	1	1	1	1		DUNLOP
6	93900-00031	VALVE, RIM	1	1	1	1		
7	5KE-25366-10	CLUTCH, HUB	1	1	1	1		
8	93306-90601	BEARING (B6906)	1	1	1	1		
9	5KE-25384-00	WASHER, WHEEL	1	1	1	1		
10	4TW-25383-00	COLLAR, WHEEL	1	1	1	1		
11	5KE-25376-00	COLLAR, WHEEL	1	1	1	1		
12	4TW-25398-00	BALANCER, WHEEL	1	1	1	1		UN
13	5KE-25436-10	SPROCKET, DRIVEN (36T)	1	1	1	1		STD
	5KE-25435-10	SPROCKET, DRIVEN (35T)	1	1	1	1		AP
	5KE-25437-10	SPROCKET, DRIVEN (37T)	1	1	1	1		AP
	5KE-25438-10	SPROCKET, DRIVEN (38T)	1	1	1	1		AP
	5KE-25439-10	SPROCKET, DRIVEN (39T)	1	1	1	1		AP
	5KE-25440-10	SPROCKET, DRIVEN (40T)	1	1	1	1		AP
14	3YL-25364-00	DAMPER	5	5	5	5		
15	90185-08097	NUT, SELF-LOCKING	5	5	5	5		
16	94561-62110	CHAIN (RKGB520TRU 110L)	1	1	1	1		STD
	94561-62114	CHAIN (RKGB520TRU 114L)	1	1	1	1		AP
17	94661-62031	JOINT, CHAIN	1	1	1	1		
18	4TW-25388-01	PULLER, CHAIN 1	1	1	1	1		
19	4TW-25389-01	PULLER, CHAIN 2	1	1	1	1		
20	4DP-25379-00	BOLT, CHAIN PULLAR	2	2	2	2		
21	90185-08097	NUT, SELF-LOCKING	2	2	2	2		

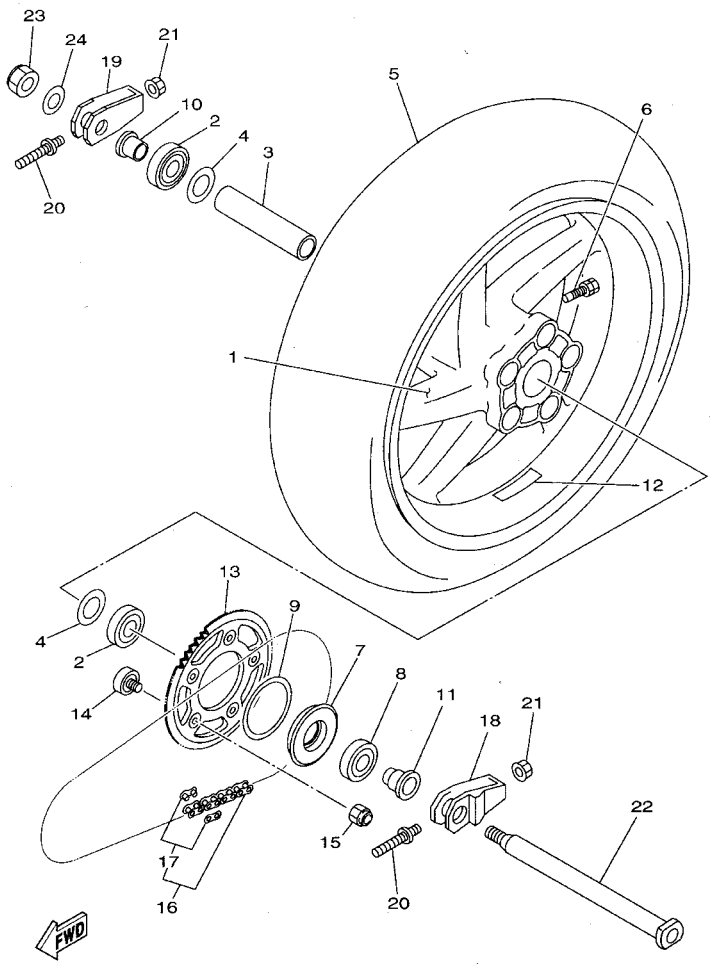

5KE2100-1240

FIG. 24 REAR WHEEL

REF. NO.	PART NO.	DESCRIPTION	USA	EUR	OCE	JPN		REMARKS
22	4TW-25381-00	AXLE, WHEEL	1	1	1	1		
23	90185-18104	NUT, SELF-LOCKING	1	1	1	1		
24	90201-183E1	WASHER, PLATE	1	1	1	1		

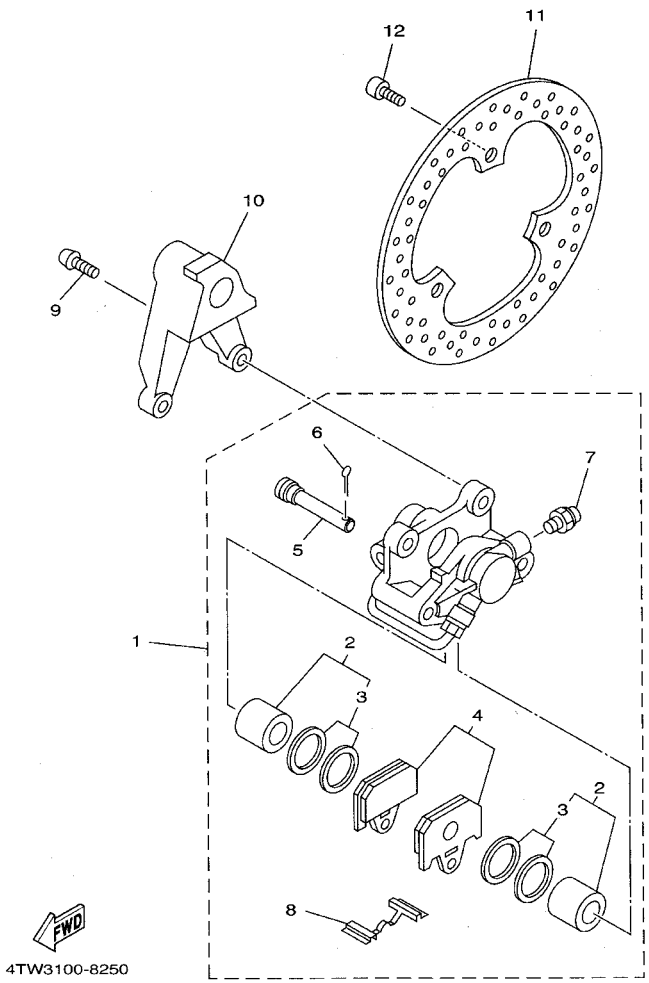

FIG. 25 REAR BRAKE CALIPER

REF. NO.	PART NO.	DESCRIPTION	USA	EUR	OCE	JPN		REMARKS
1	4TW-2580W-01	CALIPER ASSY, REAR 2	1	1	1	1		
2	4DP-W0057-00	.PISTON ASSY, CALIPER	1	1	1	1		
3	3LC-W0047-50	..CALIPER SEAL KIT	1	1	1	1		
4	4TW-W0046-00	.BRAKE PAD KIT 2	1	1	1	1		
5	4JT-25924-00	.PIN, PAD	1	1	1	1		
6	91401-16012	.PIN, COTTER	1	1	1	1		
7	1UY-W0048-50	.BLEED SCREW KIT	1	1	1	1		
8	5KE-25919-50	.SUPPORT, PAD	1	1	1	1		
9	92017-08020	BOLT, BUTTON HEAD	2	2	2	2		
10	4TW-25819-00	BRACKET, CALIPER	1	1	1	1		
11	4TW-2582W-00	DISC, REAR BRAKE 2	1	1	1	1		
12	90110-08193	BOLT, HEXAGON SOCKET HEAD	3	3	3	3		

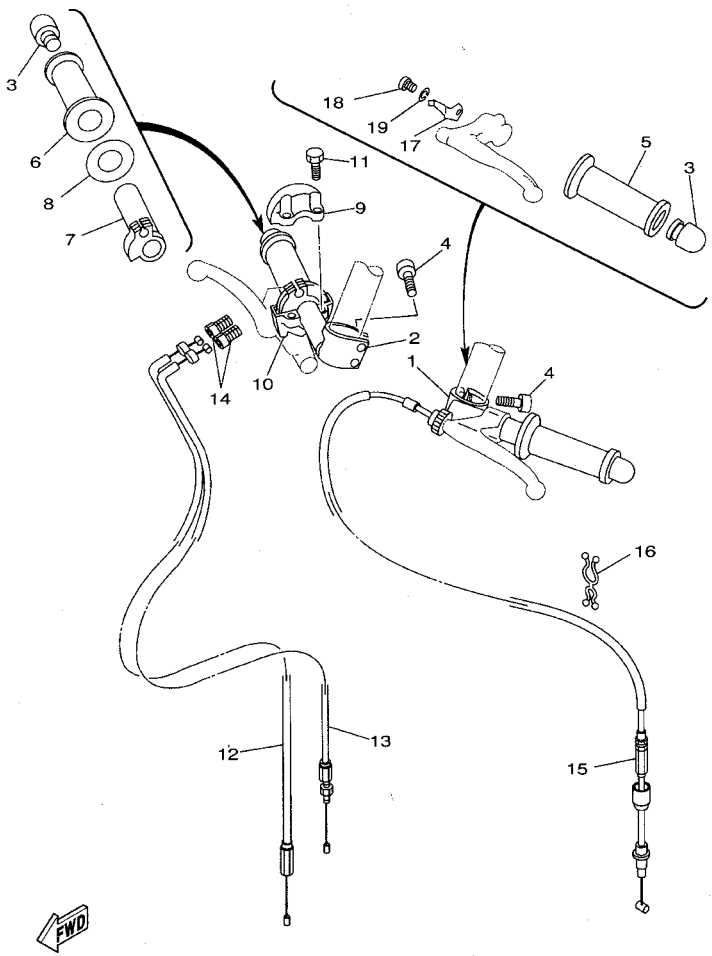

4TW3100-8260

FIG. 26 STEERING HANDLE. CABLE

REF. NO.	PART NO.	DESCRIPTION	USA	EUR	OCE	JPN		REMARKS
1	3YL-26121-00	HANDLEBAR (LEFT)	1	1	1	1		
2	3YL-26122-01	HANDLEBAR (RIGHT)	1	1	1	1		
3	4JT-26246-00	END, GRIP	2	2	2	2		
4	91317-06025	BOLT	4	4	4	4		
5	47X-26241-00	GRIP (LEFT)	1	1	1	1		
6	47X-26242-00	GRIP (RIGHT)	1	1	1	1		
7	3YL-26243-00	TUBE, THROTTLE GUIDE	1	1	1	1		
8	3Y1-26249-00	RING, LEAF	1	1	1	1		
9	3YL-26281-01	CAP, GRIP UPPER	1	1	1	1		
10	3YL-26282-00	CAP, GRIP LOWER	1	1	1	1		
11	91317-05020	BOLT	2	2	2	2		
12	5KE-26311-00	CABLE, THROTTLE 1	1	1	1	1		
13	5KE-26312-00	CABLE, THROTTLE 2	1	1	1	1		
14	90123-06007	BOLT	2	2	2	2		
15	5KE-26335-00	CABLE, CLUTCH	1	1	1	1		
16	90464-16115	CLAMP	1	1	1	1		
17	5F6-26368-00	SPRING, LOCK	1	1	1	1		
18	98507-05008	SCREW, PAN HEAD	1	1	1	1		
19	92907-05100	WASHER, SPRING	1	1	1	1		

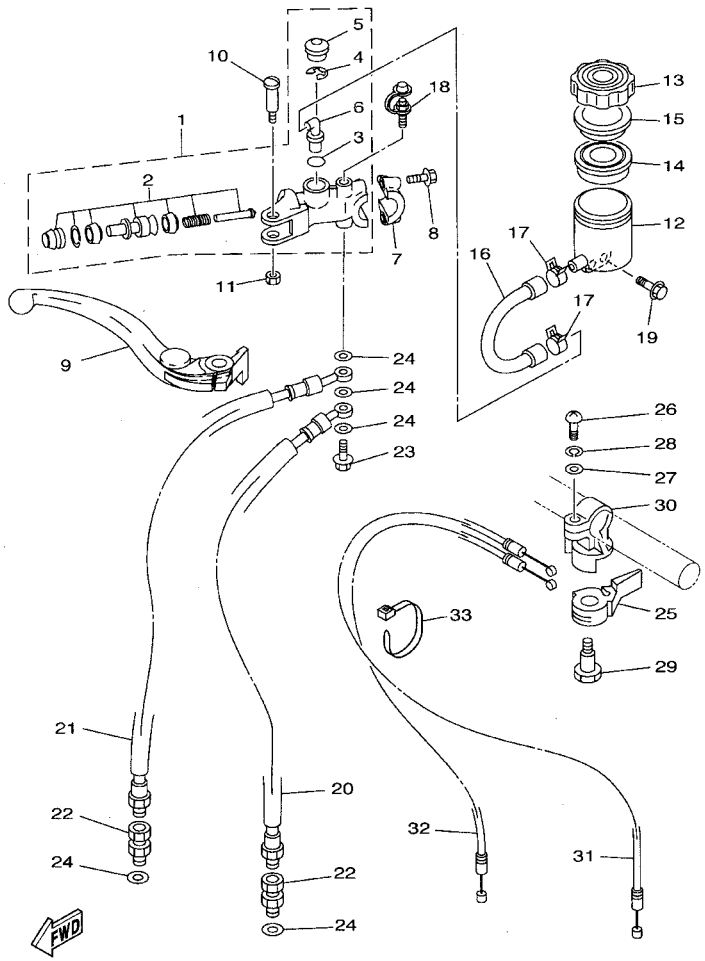

5KE2100-1270

FIG. 27 FRONT MASTER CYLINDER

REF. NO.	PART NO.	DESCRIPTION	USA	EUR	OCE	JPN		REMARKS
1	5KE-W2587-00	MASTER CYLINDER SUB ASSY	1	1	1	1		
2	5KE-W0041-00	.CYLINDER KIT, MASTER	1	1	1	1		
3	93210-15620	.O-RING	1	1	1	1		
4	2VN-25866-00	.CIRCLIP	1	1	1	1		
5	3FV-2589A-00	.COVER, DUST	1	1	1	1		
6	2VN-2582A-50	.JOINT	1	1	1	1		
7	56A-25867-00	BRACKET, MASTER CYLINDER	1	1	1	1		
8	5EB-26332-00	BOLT	2	2	2	2		
9	5KE-83922-00	LEVER 2	1	1	1	1		
10	3FV-2589F-00	BOLT, LEVER	1	1	1	1		
11	95606-06100	NUT, U	1	1	1	1		
12	3FV-25894-00	TANK, RESERVOIR	1	1	1	1		
13	3GM-25852-50	CAP, RESERVOIR	1	1	1	1		
14	3FV-25854-00	DIAPHRAGM, RESERVOIR	1	1	1	1		
15	2J2-25855-50	BUSH,DIAPHRAGM	1	1	1	1		
16	5KE-25895-00	HOSE, RESERVOIR	1	1	1	1		
17	3PA-24356-00	CLIP, PIPE 1	2	2	2	2		
18	36Y-W0048-00	BLEED SCREW KIT	1	1	1	1		
19	95027-06014	BOLT, FLANGE	1	1	1	1		
20	5KE-25872-00	HOSE, BRAKE 1	1	1	1	1		
21	5KE-25873-00	HOSE, BRAKE 2	1	1	1	1		
22	3LC-25885-00	JOINT	2	2	2	2		
23	90401-10160	BOLT, UNION	1	1	1	1		
24	90201-10118	WASHER, PLATE	5	5	5	5		
25	240-83941-00	LEVER, STARTER	1	1	1	1		
26	98507-06018	SCREW, PAN HEAD	1	1	1	1		
27	90201-12175	WASHER, PLATE	1	1	1	1		

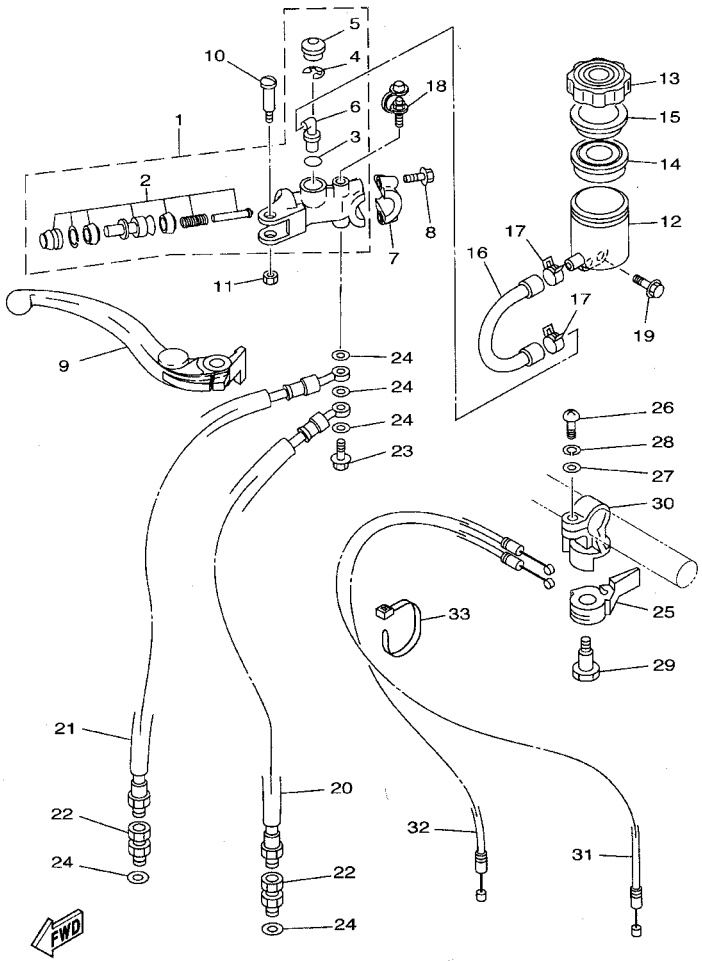

5KE2100-1270

FIG. 27 FRONT MASTER CYLINDER

REF. NO.	PART NO.	DESCRIPTION	USA	EUR	OCE	JPN		REMARKS
28	92907-06100	WASHER, SPRING	1	1	1	1		
29	90109-08398	BOLT	1	1	1	1		
30	240-83946-00	HOLDER, STARTER LEVER	1	1	1	1		
31	4DP-26331-00	CABLE, STARTER 1	1	1	1	1		
32	4DP-26334-00	CABLE, STARTER 2	1	1	1	1		
33	90465-13152	CLAMP	1	1	1	1		

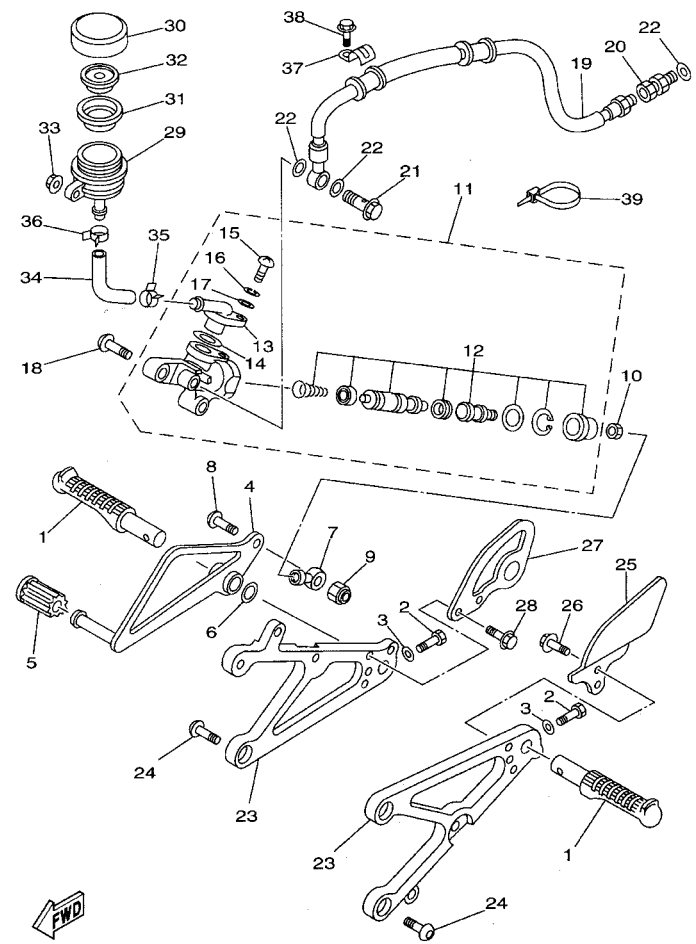

5KE1100-0280

FIG. 28 STAND. FOOTREST

REF. NO.	PART NO.	DESCRIPTION	USA	EUR	OCE	JPN		REMARKS
1	4JT-27411-20	FOOTREST 1	2	2	2	2		
2	97007-06020	BOLT	2	2	2	2		
3	92907-06600	WASHER, PLATE	2	2	2	2		
4	5KE-27211-00	PEDAL, BRAKE	1	1	1	1		
5	4A0-18113-00	COVER, SHIFT PEDAL	1	1	1	1		
6	90201-14212	WASHER, PLATE	1	1	1	1		
7	3YL-27222-00	JOINT	1	1	1	1		
8	92017-06020	BOLT, BUTTON HEAD	1	1	1	1		
9	95607-06100	NUT, U	1	1	1	1		
10	95307-06600	NUT	1	1	1	1		
11	3YL-2583V-00	RR. MASTER CYLINDER ASSY.	1	1	1	1		
12	3YL-W0042-50	.CYLINDER KIT, MASTER	1	1	1	1		
13	36Y-2582A-50	.JOINT	1	1	1	1		
14	93210-15620	.O-RING	1	1	1	1		
15	98511-04012	.SCREW, PAN HEAD	1	1	1	1		
16	92902-04100	.WASHER, SPRING	1	1	1	1		
17	92901-04600	.WASHER, PLATE	1	1	1	1		
18	92017-08025	BOLT, BUTTON HEAD	2	2	2	2		
19	4TW-25874-00	HOSE, BRAKE	1	1	1	1		
20	3LC-25885-00	JOINT	1	1	1	1		
21	90401-10168	BOLT, UNION	1	1	1	1		
22	90201-10118	WASHER, PLATE	3	3	3	3		
23	4JT-27412-20	BRACKET, FOOTREST 1	2	2	2	2		
24	92017-08020	BOLT, BUTTON HEAD	4	4	4	4		
25	4TW-27445-00	PLATE 1	1	1	1	1		
26	90119-05239	BOLT, WITH WASHER	2	2	2	2		
27	4TW-27264-00	BRACKET 2	1	1	1	1		

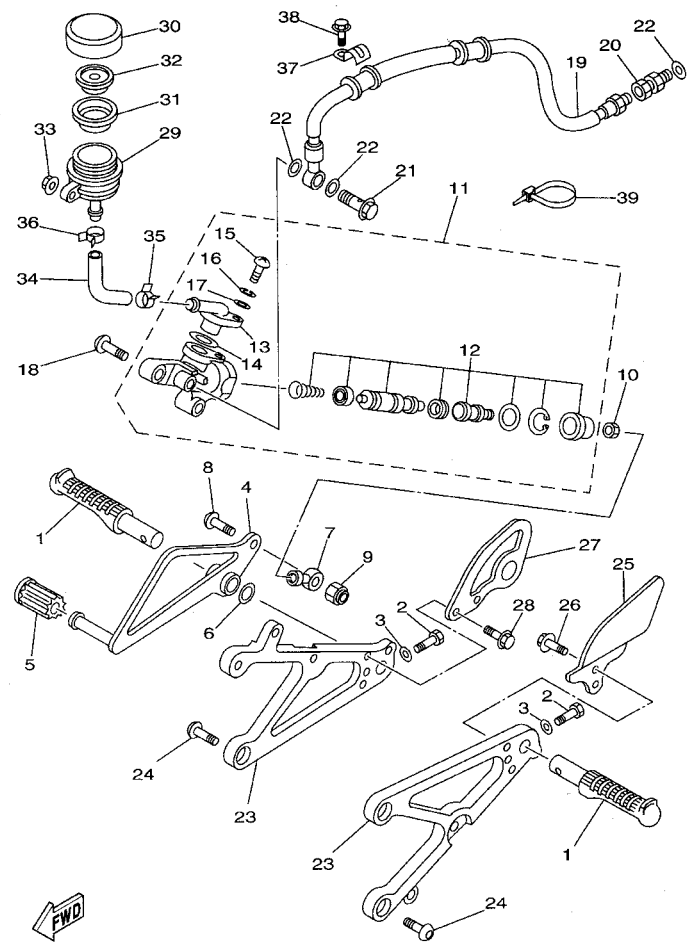

5KE1100-0280

FIG. 28 STAND. FOOTREST

REF. NO.	PART NO.	DESCRIPTION	USA	EUR	OCE	JPN		REMARKS
28	90119-05239	BOLT, WITH WASHER	2	2	2	2		
29	4EW-25894-00	TANK, RESERVOIR	1	1	1	1		
30	3XP-25852-50	CAP, RESERVOIR	1	1	1	1		
31	2VN-25854-00	DIAPHRAGM, RESERVOIR	1	1	1	1		
32	2VN-25855-00	BUSH,DIAPHRAGM	1	1	1	1		
33	95607-06200	NUT, SELF U-FLANGE	1	1	1	1		
34	4TW-25895-00	HOSE, RESERVOIR	1	1	1	1		
35	90467-14057	CLIP	1	1	1	1		
36	90467-11044	CLIP	1	1	1	1		
37	3XV-25876-00	HOLDER, BRAKE HOSE 2	2	2	2	2		
38	95027-06016	BOLT, FLANGE	2	2	2	2		
39	90464-12089	CLAMP	2	2	2	2		

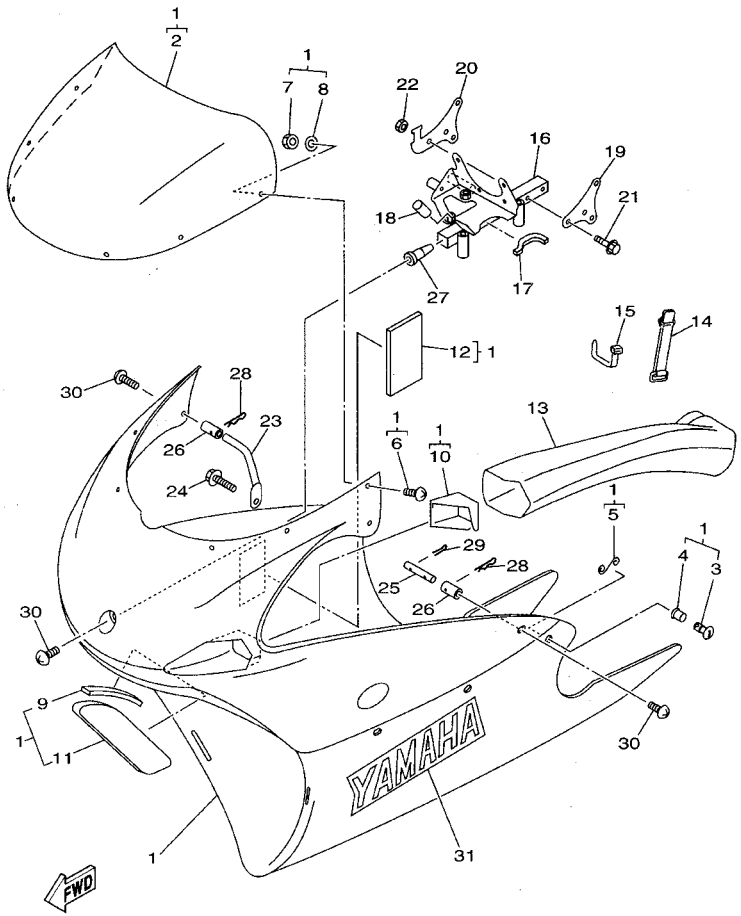

5KE2100-1290

FIG. 29 COWLING 1

REF. NO.	PART NO.	DESCRIPTION	USA	EUR	OCE	JPN		REMARKS
1	5KE-28350-00	COWLING ASSY	1	1	1	1		
2	4TW-28381-10	.WINDSHIELD	1	1	1	1		
3	3YL-28386-00	.HEAD	5	5	5	5		
4	240-28389-00	.RIVET	5	5	5	5		
5	3YL-28388-00	.SPRING	5	5	5	5		
6	98907-04010	.SCREW, BIND	6	6	6	6		
7	95607-04100	.NUT, U	6	6	6	6		
8	92907-04200	.WASHER	6	6	6	6		
9	2TV-21638-00	.DAMPER 1	1	1	1	1		
10	4TW-28371-00	.DAMPER	1	1	1	1		
11	4TW-28371-10	.DAMPER	1	1	1	1		
12	3Y6-21747-00	.DAMPER	1	1	1	1		
13	5KE-2838N-00	DUCT 1	1	1	1	1		
14	18G-82131-00	BAND, BATTERY	1	1	1	1		
15	90465-10098	CLAMP	1	1	1	1		
16	5KE-28356-00	STAY 1	1	1	1	1		
17	5KE-28345-00	MOLE 1	1	1	1	1		
18	90446-17346	HOSE	1	1	1	1		
19	4DP-2836A-00	BRACKET 1	1	1	1	1		
20	4TW-2836E-00	BRACKET 2	1	1	1	1		
21	95027-06030	BOLT, FLANGE	4	4	4	4		
22	95617-06100	NUT, U	4	4	4	4		
23	4JT-28321-00	STAY 1	2	2	2	2		
24	95027-06014	BOLT, FLANGE	2	2	2	2		
25	3YL-28358-00	STAY 3	2	2	2	2		
26	4A0-28364-00	NUT	4	4	4	4		
27	4DP-28362-01	NUT	1	1	1	1		

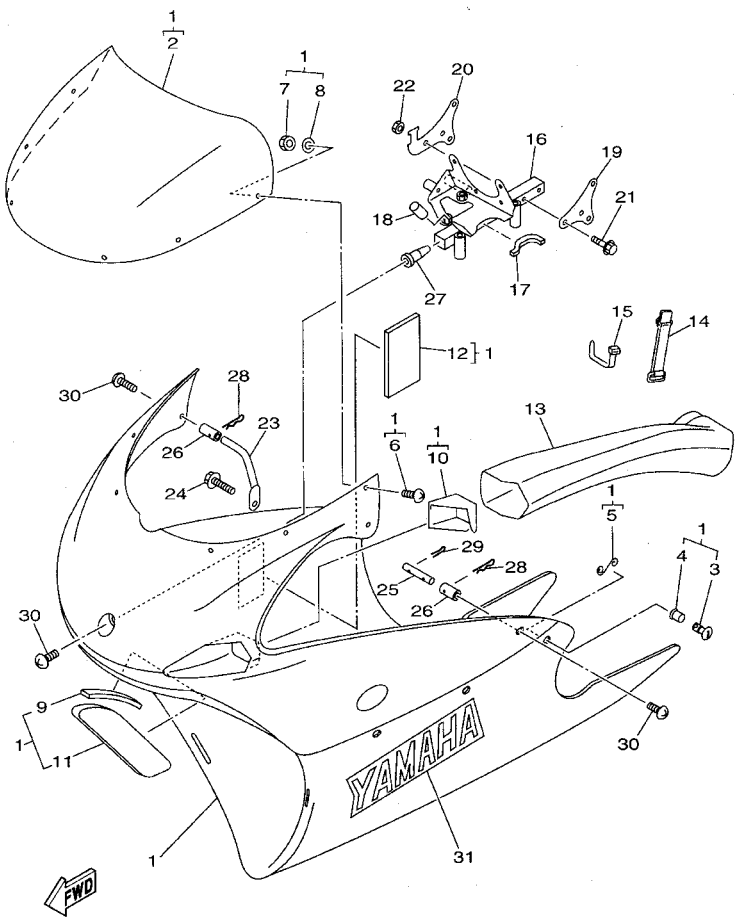

FIG. 29 COWLING 1

REF. NO.	PART NO.	DESCRIPTION	USA	EUR	OCE	JPN		REMARKS
28	4DP-28334-00	CLIP, COWLING	4	4	4	4		
29	91401-25030	PIN, COTTER	2	2	2	2		
30	90150-06021	SCREW, ROUND HEAD	5	5	5	5		
31	99247-00280	EMBLEM, YAMAHA	2	2	2	2		

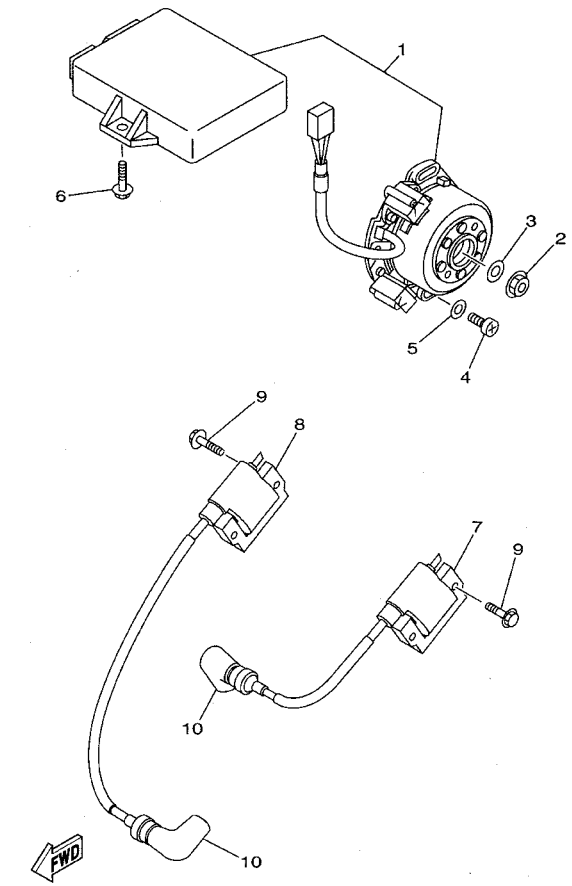

5KE1100-0300

FIG. 30 GENERATOR

REF. NO.	PART NO.	DESCRIPTION	USA	EUR	OCE	JPN		REMARKS
1	5KE-85501-10	C.D.I. MAGNETO SET	1	1	1	1		
2	90179-12248	NUT	1	1	1	1		
3	90201-127E1	WASHER, PLATE	1	1	1	1		
4	98580-06020	SCREW, PAN HEAD	2	2	2	2		
5	90201-06043	WASHER, PLATE	2	2	2	2		
6	95027-06020	BOLT, FLANGE	2	2	2	2		
7	3YL-82310-00	IGNITION COIL ASSY	1	1	1	1		
8	3YL-82320-01	IGNITION COIL ASSY	1	1	1	1		
9	95027-06020	BOLT, FLANGE	4	4	4	4		
10	4PE-82370-10	PLUG CAP ASSY	2	2	2	2		

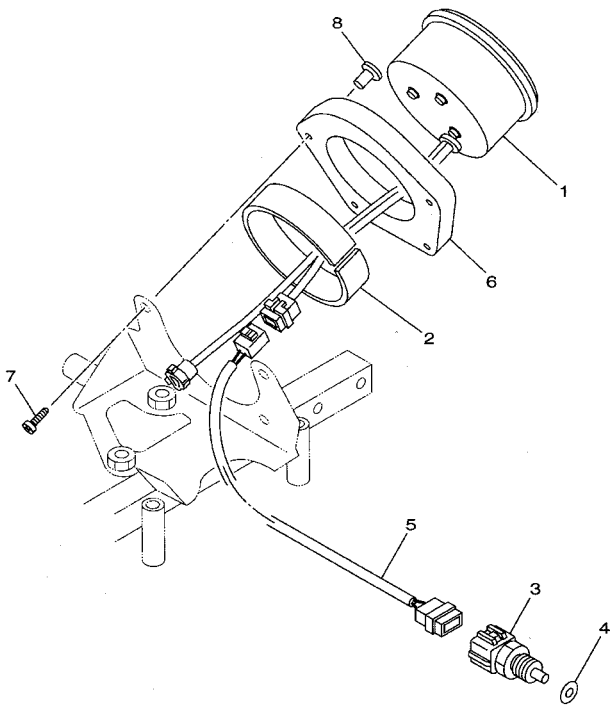

5KE2100-1310

FIG. 31 METER

REF. NO.	PART NO.	DESCRIPTION	USA	EUR	OCE	JPN		REMARKS
1	5KE-83540-01	TACHOMETER ASSY	1	1	1	1		
2	4A0-83541-00	DAMPER	1	1	1	1		
3	5KE-83591-10	THERMO UNIT	1	1	1	1		
4	90430-08020	GASKET	1	1	1	1		
5	5KE-83553-00	WIRE, LEAD	1	1	1	1		
6	5KE-83611-00	PANEL, METER	1	1	1	1		
7	97780-40110	SCREW, TAPPING	4	4	4	4		
8	4A0-83522-00	COLLAR	4	4	4	4		

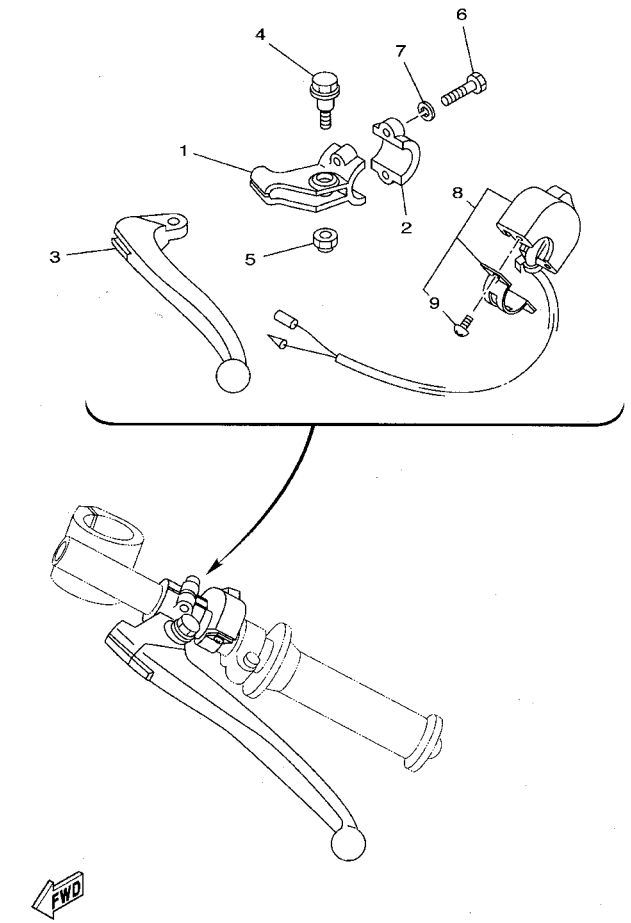

4TW3100-8320

FIG. 32 HANDLE SWITCH. LEVER

REF. NO.	PART NO.	DESCRIPTION	USA	EUR	OCE	JPN		REMARKS
1	5F6-82911-00	HOLDER, LEVER 1	1	1	1	1		
2	4V4-82913-00	HOLDER, LEVER LOWER 1	1	1	1	1		
3	214-83912-00	LEVER 1	1	1	1	1		
4	90109-06799	BOLT	1	1	1	1		
5	95607-06100	NUT, U	1	1	1	1		
6	97007-05020	BOLT	2	2	2	2		
7	92907-05100	WASHER, SPRING	2	2	2	2		
8	4TW-83976-00	SWITCH, HANDLE 1	1	1	1	1		
9	98507-04014	.SCREW, PAN HEAD	2	2	2	2		

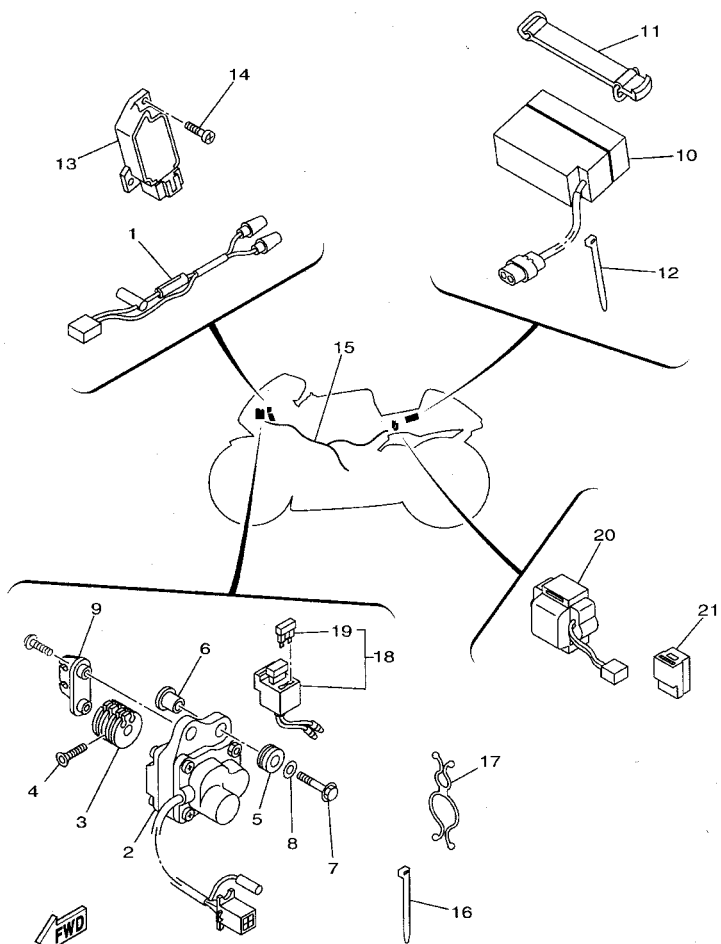

5KE1100-0330

FIG. 33 ELECTRICAL 1

REF. NO.	PART NO.	DESCRIPTION	USA	EUR	OCE	JPN		REMARKS
1	4TW-82117-00	WIRE, LEAD	1	1	1	1		
2	3LC-85850-00	GEARED MOTOR COMP.	1	1	1	1		
3	3YL-85821-00	PULLEY, DRIVE	1	1	1	1		
4	90151-05031	SCREW, COUNTERSUNK	1	1	1	1		
5	90480-14023	GROMMET	2	2	2	2		
6	90387-063E6	COLLAR	2	2	2	2		
7	95027-06025	BOLT, FLANGE	2	2	2	2		
8	90201-06380	WASHER, PLATE	2	2	2	2		
9	3YL-85824-00	BRACKET, CABLE	1	1	1	1		
10	4TW-82100-10	BATTERY ASSY (GS PE12V0.8)	1	1	1			
	4TW-82100-00	BATTERY ASSY (GS PE12V0.8)				1		
11	18G-82131-00	BAND, BATTERY	1	1	1	1		
12	90464-13077	CLAMP	1	1	1	1		
13	1JK-81960-A1	RECTIFIER & REGULATOR ASSY	1	1	1	1		
14	98507-06020	SCREW, PAN HEAD	2	2	2	2		
15	5KE-82590-10	WIRE HARNESS ASSY	1	1	1	1		
16	90465-13275	CLAMP	2	2	2	2		
17	90464-26114	CLAMP	2	2	2	2		
18	4HF-82150-00	FUSE HOLDER ASSY	1	1	1	1		
19	42X-82151-00	.FUSE (10A-BL)	2	2	2	2		
20	4TW-82576-00	EMERGENCY STOP SWITCH ASSY	1	1	1	1		
21	1UY-81950-92	RELAY ASSY	1	1	1	1		

YAMAHA
ヤマハ発動機株式会社
〒438-8501 静岡県磐田市新貝2500
サービス情報室

再生紙を使用しています

444778